Texas Department of Transportation
© 2023

DALLAS DISTRICT
CEASON G CLEMENS, P.E., DISTRICT ENGINEER

DESIGN SCHEMATIC
FM 6
COLLIN COUNTY

CSJ: 0619-01-027
FROM: SH 78
TO: EAST OF FM 1777
NET LENGTH OF PROJECT = 7.88 MI
ROADWAY = 7.83 MI
BRIDGE = 0.05 MI

DESIGN CRITERIA:

FUNCTIONAL CLASSIFICATION:	URBAN MAJOR COLLECTOR
TERRAIN:	LEVEL
DESIGN SPEED:	45 MPH - URBAN STREET
DESIGN SPEED (CROSS ST):	VARIES 30 MPH TO 55 MPH

ADT (2025) = 12,100
ADT (2045) = 16,550
ADT (2055) = 18,600

COUNTY: COLLIN
DATE: MAY 2023

LOCATION MAP

N.T.S.

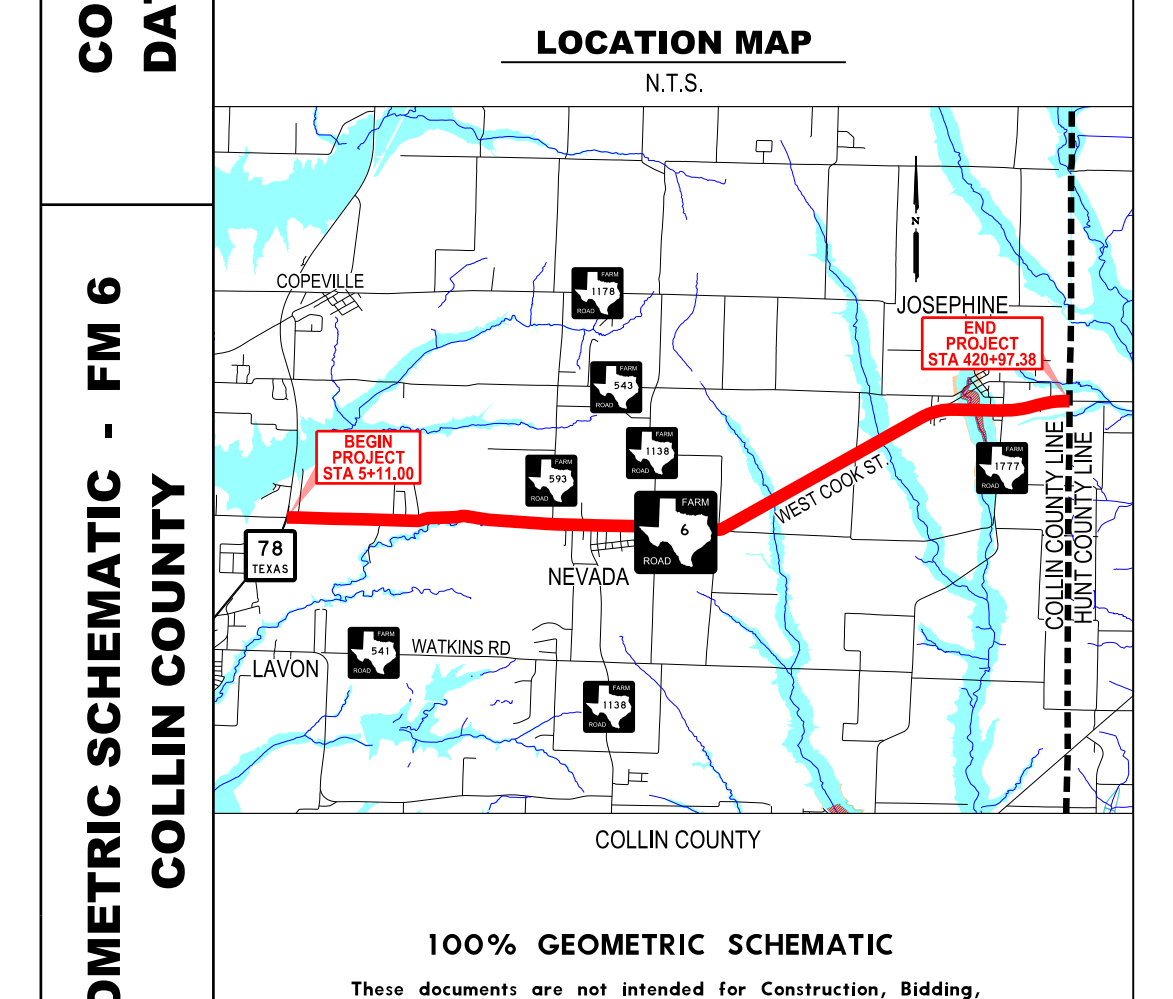
COPEVILLE
JOSEPHINE
END PROJECT STA 420+97.38
BEGIN PROJECT STA 5+11.00
78
NEVADA
WEST COOK ST
LAVON
WATKINS RD
COLLIN COUNTY LINE
HUNT COUNTY LINE

COLLIN COUNTY

GEOMETRIC SCHEMATIC - FM 6
COLLIN COUNTY

ROLL 1 OF 4

100% GEOMETRIC SCHEMATIC

These documents are not intended for Construction, Bidding, or Permit Purposes. They were prepared by, or under the supervision of :

PETER G. JACOBS
67725
LICENSED PROFESSIONAL ENGINEER
Peter G. Jacobs
6/21/2023

ROLL INDEX:

ROLL 1:	FM 6 MAINLANES STA. 4+63.51 TO STA. 112+00
ROLL 2:	FM 6 MAINLANES STA. 112+00 TO STA. 220+00
ROLL 3:	FM 6 MAINLANES STA. 220+00 TO STA. 328+00
ROLL 4:	FM 6 MAINLANES STA. 328+00 TO STA. 420+97.38

HORIZONTAL SCALE
0 50 100 200 300

VERTICAL SCALE
0 5 10 20 30

ROLL 1 OF 4

KCI TECHNOLOGIES
ENGINEERS | PLANNERS | SCIENTISTS | CONSTRUCTION MANAGERS
13750 San Pedro Avenue, San Antonio, TX 78232
Phone: 210.544.5751
www.kci.com
TBPE Registration No. F-10573

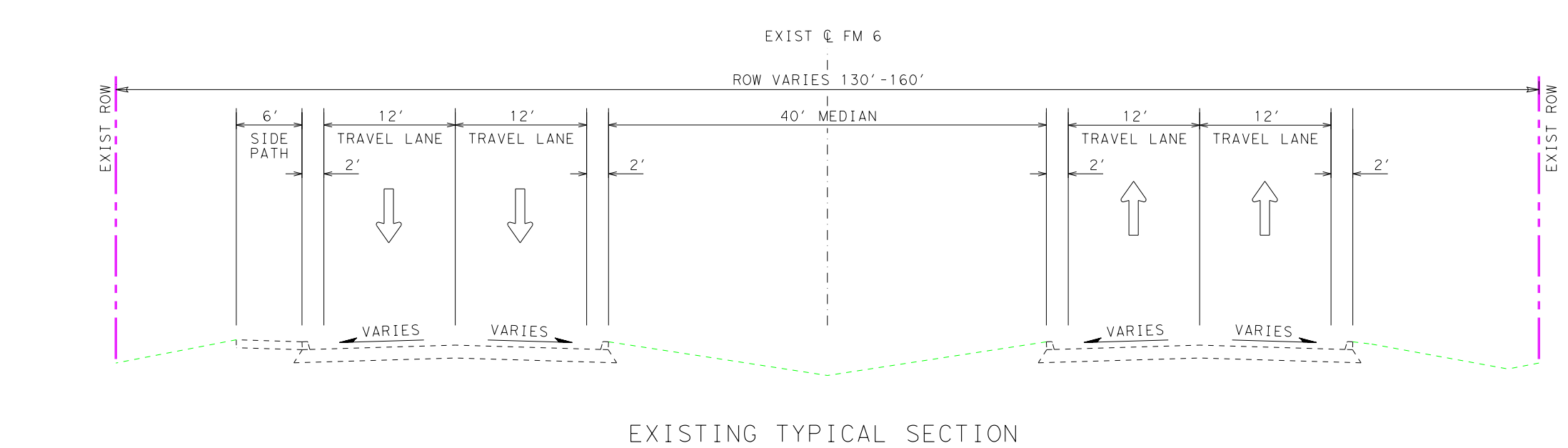
EXIST ℄ FM 6
ROW VARIES 130'-160'
EXIST ROW
6' SIDE PATH
12' TRAVEL LANE
12' TRAVEL LANE
40' MEDIAN
12' TRAVEL LANE
12' TRAVEL LANE
2'
VARIES

EXISTING TYPICAL SECTION
STA 5+11 TO STA 19+78

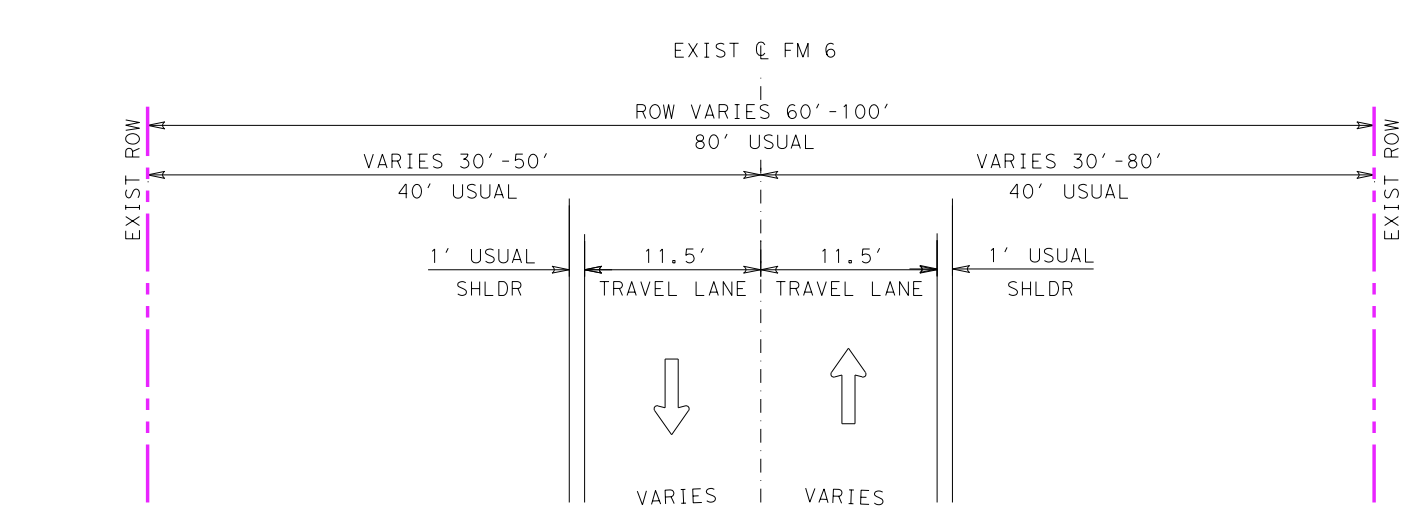
EXIST ℄ FM 6
ROW VARIES 60'-100'
80' USUAL
VARIES 30'-50'
40' USUAL
VARIES 30'-80'
40' USUAL
1' USUAL SHLDR
11.5' TRAVEL LANE
11.5' TRAVEL LANE
1' USUAL SHLDR
EXIST ROW
VARIES

EXISTING TYPICAL SECTION
STA 19+78 TO STA 112+00

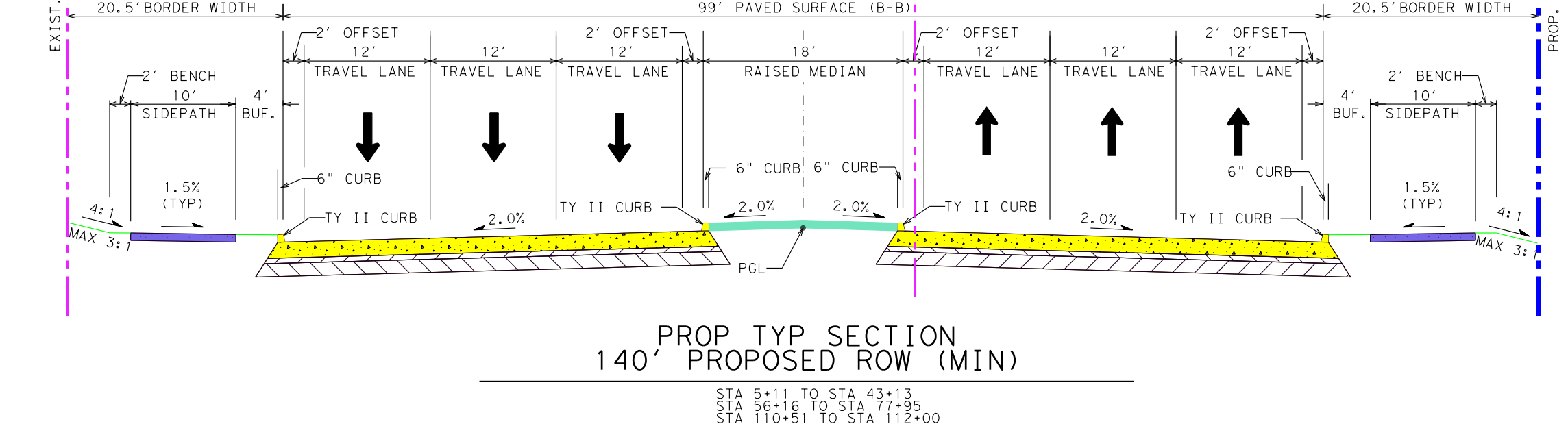
PROP. ℄ FM 6
EXIST. R.O.W.
PROP. R.O.W. VARIES 140' TO 180' (140' USUAL)
10'
20.5' BORDER WIDTH
99' PAVED SURFACE (B-B)
2' OFFSET
12' TRAVEL LANE
12' TRAVEL LANE
12' TRAVEL LANE
18' RAISED MEDIAN
2' BENCH
10' SIDEPATH
4' BUF.
6" CURB
TY II CURB
1.5% (TYP)
2.0%
4:1
MAX 3:1
PGL
PROP. R.O.W.

PROP TYP SECTION
140' PROPOSED ROW (MIN)
STA 5+11 TO STA 43+13
STA 56+16 TO STA 77+95
STA 110+51 TO STA 112+00

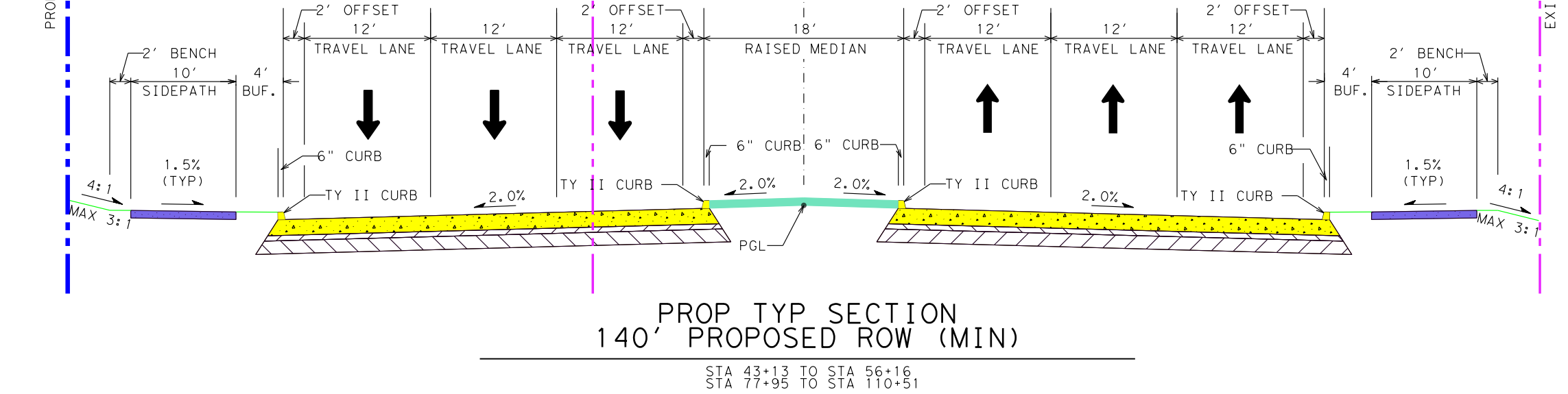
PROP. ℄ FM 6
EXIST. R.O.W.
PROP. R.O.W.
PROP. R.O.W. VARIES 140' TO 185' (140' USUAL)
VARIES 10'-20'
20.5' BORDER WIDTH
99' PAVED SURFACE (B-B)
2' OFFSET
12' TRAVEL LANE
18' RAISED MEDIAN
2' BENCH
10' SIDEPATH
4' BUF.
6" CURB
TY II CURB
1.5% (TYP)
2.0%
4:1
MAX 3:1
PGL

PROP TYP SECTION
140' PROPOSED ROW (MIN)
STA 43+13 TO STA 56+16
STA 77+95 TO STA 110+51

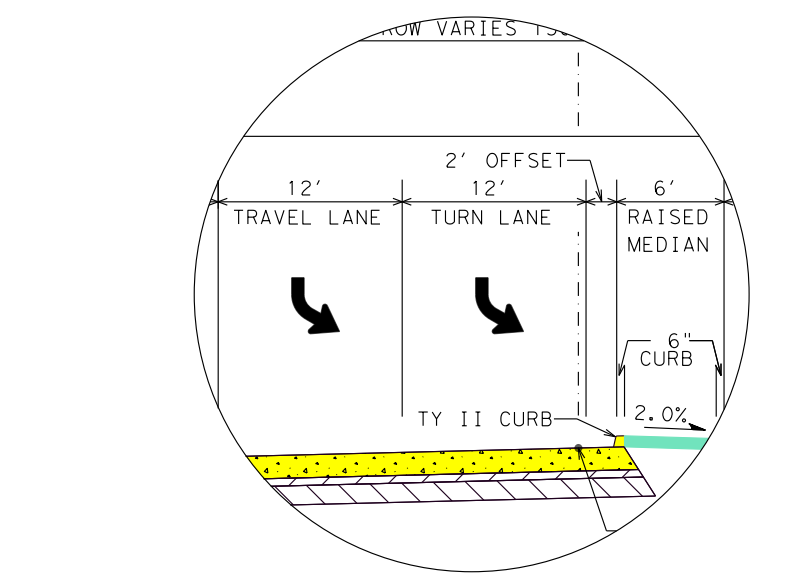
ROW VARIES
2' OFFSET
12' TRAVEL LANE
12' TURN LANE
6' RAISED MEDIAN
6" CURB
TY II CURB
2.0%

DETAIL A
STA 5+59 TO STA 8+50

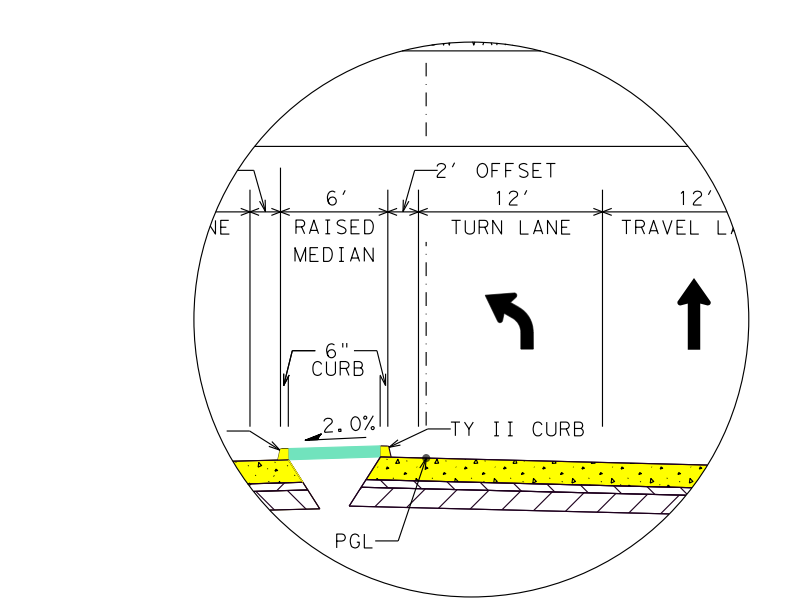
6' RAISED MEDIAN
2' OFFSET
12' TURN LANE
12' TRAVEL LANE
6" CURB
2.0%
TY II CURB
PGL

DETAIL B
STA 10+14 TO STA 13+54
STA 22+74 TO STA 26+20
STA 54+32 TO STA 57+83
STA 96+20 TO STA 99+67

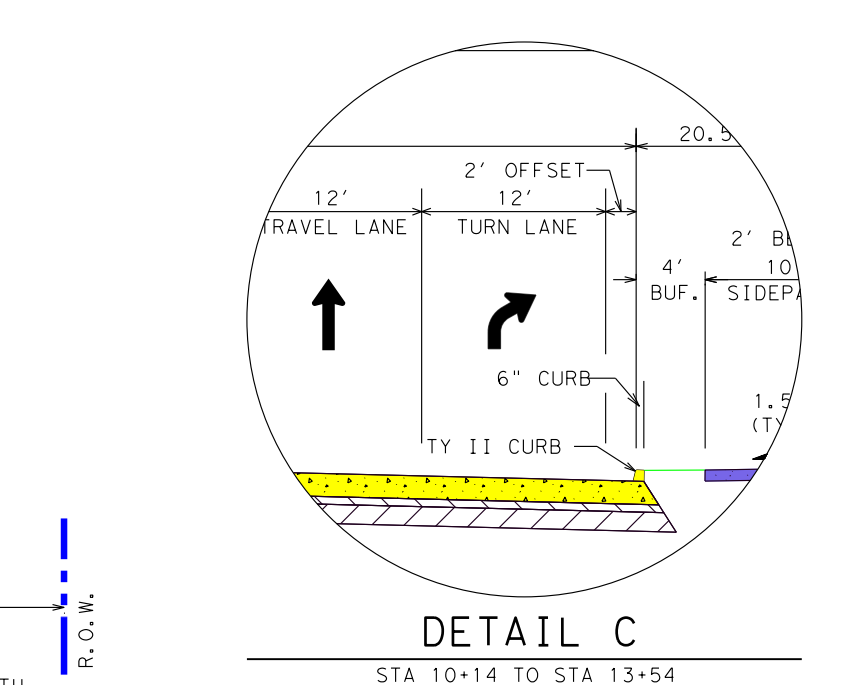
12' TRAVEL LANE
2' OFFSET
12' TURN LANE
4' BUF.
2' BENCH
10' SIDEPATH
6" CURB
TY II CURB

DETAIL C
STA 10+14 TO STA 13+54
STA 22+74 TO STA 26+26
STA 32+63 TO STA 36+03

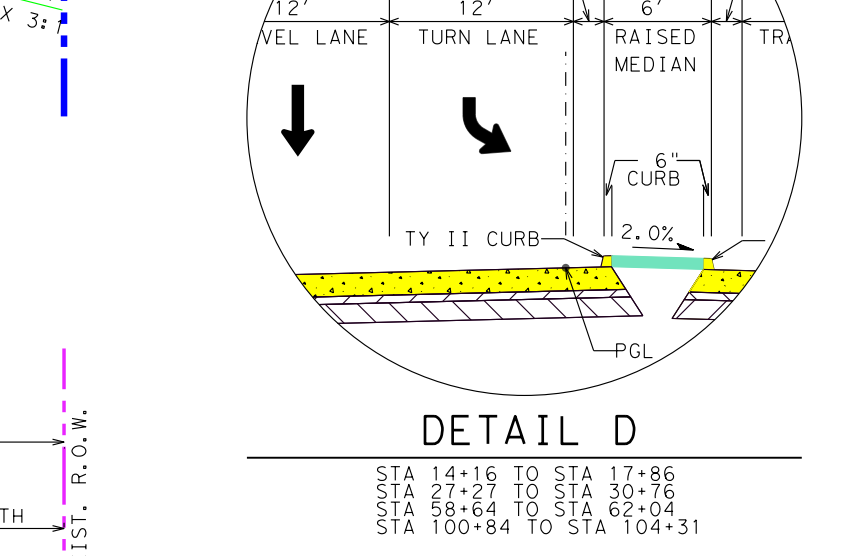
12' TRAVEL LANE
2' OFFSET
6' TURN LANE
RAISED MEDIAN
6" CURB
TY II CURB
2.0%
PGL

DETAIL D
STA 14+16 TO STA 17+86
STA 27+27 TO STA 30+76
STA 58+64 TO STA 62+04
STA 100+84 TO STA 104+31

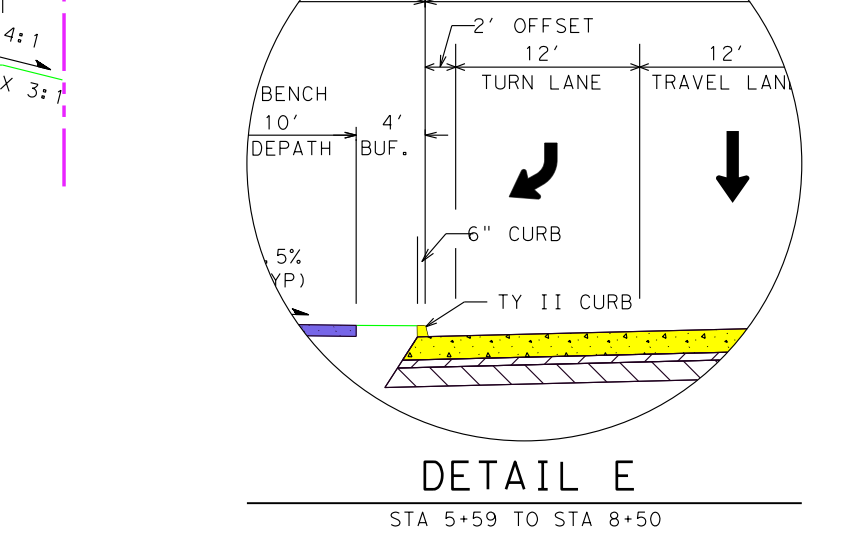
BORDER WIDTH
2' BENCH
10' SIDEPATH
4' BUF.
2' OFFSET
12' TURN LANE
12' TRAVEL LANE
6" CURB
TY II CURB

DETAIL E
STA 5+59 TO STA 8+50

PLAN LEGEND:

- PROPOSED ℄
- PROPOSED R.O.W.
- PROPOSED DRAINAGE EASEMENT
- EXISTING R.O.W.
- PROPOSED PEDESTRIAN RAIL
- REGULATORY FLOODWAY
- 100 YR FLOODPLAIN LIMITS
- 500 YR FLOODPLAIN LIMITS
- PARCEL LINE
- COUNTY LINE
- PROPOSED DRAINAGE
- EXISTING DRAINAGE
- PROPOSED DIRECTION OF TRAVEL
- EXISTING DIRECTION OF TRAVEL
- PROPOSED BRIDGE
- PROPOSED ROADWAY
- PROPOSED DRIVEWAY
- PROPOSED SIDEPATH
- PROPOSED MEDIAN
- CEMETERY
- DISPLACEMENT
- POTENTIAL DISPLACEMENT
- SIDEWALK REMOVAL
- ROADWAY REMOVAL
- CURVE - ## CURVE ID
- ## PARCEL ID

PLAN LEGEND:

- C1 COMMUNICATIONS QL "B"
- C1 COMMUNICATIONS QL "C"/QL "D"
- E1 POWER LINE QL "B"
- E1 POWER LINE QL "C"/QL "D"
- G1 GAS LINE QL "B"
- G1 GAS LINE QL "C"/QL "D"
- WW1 SANITARY SEWER LINE QL "B"
- WW1 SANITARY SEWER LINE QL "C"/QL "D"
- SD1 STORM DRAIN LINE QL "B"
- SD1 STORM DRAIN LINE QL "C"/QL "D"
- W1 POTABLE WATER LINE QL "B"
- W1 POTABLE WATER LINE QL "C"/QL "D"
- X ABANDONED WATER LINE
- TS1 TRAFFIC SIGNAL LINE QL "B"
- TS1 TRAFFIC SIGNAL LINE QL "C"/QL "D"
- OH OVERHEAD UTILITY LINE
- PP POWER POLE
- FLOWLINE

GENERAL NOTES:

1. EXISTING FEATURES WERE NOT FIELD SURVEYED. SCHEMATICS ARE BASED ON AERIAL SURVEYS DATED 05-29 2020 AND RECORD PLANS.
2. FINAL LOCATION OF MEDIAN OPENINGS WILL BE DETERMINED IN THE PS&E DEVELOPMENT PHASE IN COORDINATION WITH THE LOCAL GOVERNMENTS.
3. SUPERELEVATION AXIS OF ROTATION IS ABOUT THE PGL.
4. DIMENSIONS ARE TO THE EDGE OF PAVEMENT OR NOMINAL FACE OF CURB, RAIL, BARRIER, OR WALL (UNLESS NOTED OTERWISE).
5. APPROXIMATE 100 YEAR FLOODPLAIN LIMITS ARE BASED UPON FEMA FLOOD INSURANCE RATE MAP 48085C0445J AND 48085C0465J, DATED JUNE 2, 2009.
6. OWNERSHIP INFORMATION SHOWN ON SCHEMATIC OBTAINED FROM, COLLIN COUNTY APPRAISAL DISTRICT. (LATEST DATA AVAILABLE AS OF SEPTEMBER 2022)
7. EXISTING CULVERT LOCATIONS, SIZE, AND ELEVATIONS OBTAINED FROM RECORD DOCUMENTS AND ARE SHOWN FOR INFORMATIONAL PURPOSES ONLY.
8. ADA RAMPS AND SIDEWALKS ARE DIAGRAMMATIC ONLY AND WILL BE DESIGNED DURING PS&E. SIDEWALKS ARE SHOWN ON TYPICAL SECTIONS.
9. EXISTING DRIVEWAYS WILL REMAIN UNLESS IT IS DETERMINED IN COORDINATION WITH THE LOCAL GOVENMENT THAT THE DRIVEWAY IS A SAFETY ISSUE AND/OR IS LOCATED WITHIN ACCESS DENIAL LIMITS.
10. PRIMARY BUILDINGS ARE SHOWN AS POTENTIAL DISPLACEMENT IF THE PROPOSED R.O.W. IS WITHIN 25' OF THE EXISTING BUILDING STRUCTURE.
11. CONVENTIONAL ROADWAY SIGNAGE (SMALL SIGNS) ARE NOT SHOWN AND WILL BE DEVELOPED DURING THE PS&E PHASE OF THE PROJECT.
12. EXISTING PAVEMENT/BRIDGES LOCATED WITHIN LIMITS OF PROPOSED RECONSTRUCTION WILL BE REMOVED (UNLESS NOTED OTHERWISE).
13. TYPICAL DRIVEWAY CURB RETURN RADII IS 15 FEET FOR RESIDENTIAL AND 30 FEET FOR CROSS STREETS UNLESS NOTED OTHERWISE.
14. CURBS ARE TYPE II (8") UNLESS NOTED OTHERWISE

CURVE DATA TABLE:

CURVE - 01		CURVE - 06	
PI STATION	= 12+81.24	PI STATION	= 72+97.45
DELTA	= 1° 31' 33.38" (RT)	DELTA	= 29° 51' 04.27" (LT)
DEGREE OF CURVE	= 0° 53' 03.10"	DEGREE OF CURVE	= 5° 30' 33.15"
TANGENT	= 86.29	TANGENT	= 277.22
LENGTH	= 172.58	LENGTH	= 541.84
RADIUS	= 6,480.00	RADIUS	= 1,040.00
PC STATION	= 11+94.95	PC STATION	= 70+20.23
PT STATION	= 13+67.53	PT STATION	= 75+62.07

CURVE - 02		CURVE - 07	
PI STATION	= 41+90.53	PI STATION	= 77+99.79
DELTA	= 13° 36' 29.93" (LT)	DELTA	= 25° 45' 04.27" (RT)
DEGREE OF CURVE	= 5° 30' 33.15"	DEGREE OF CURVE	= 5° 30' 33.15"
TANGENT	= 124.09	TANGENT	= 237.73
LENGTH	= 247.01	LENGTH	= 467.42
RADIUS	= 1,040.00	RADIUS	= 1,040.00
PC STATION	= 40+66.45	PC STATION	= 75+62.07
PT STATION	= 43+13.46	PT STATION	= 80+29.49

CURVE - 03		CURVE - 08	
PI STATION	= 44+41.23	PI STATION	= 97+28.84
DELTA	= 14° 00' 29.93" (RT)	DELTA	= 12° 54' 00.00" (RT)
DEGREE OF CURVE	= 5° 30' 33.15"	DEGREE OF CURVE	= 5° 30' 33.15"
TANGENT	= 127.77	TANGENT	= 117.57
LENGTH	= 254.27	LENGTH	= 234.15
RADIUS	= 1,040.00	RADIUS	= 1,040.00
PC STATION	= 43+13.46	PC STATION	= 96+11.26
PT STATION	= 45+67.73	PT STATION	= 98+45.42

CURVE - 04	
PI STATION	= 53+66.63
DELTA	= 13° 47' 43.08" (RT)
DEGREE OF CURVE	= 5° 30' 33.15"
TANGENT	= 125.81
LENGTH	= 250.40
RADIUS	= 1,040.00
PC STATION	= 52+40.82
PT STATION	= 54+91.23

CURVE - 05	
PI STATION	= 56+17.04
DELTA	= 13° 47' 43.08" (LT)
DEGREE OF CURVE	= 5° 30' 33.15"
TANGENT	= 125.81
LENGTH	= 250.40
RADIUS	= 1,040.00
PC STATION	= 54+91.23
PT STATION	= 57+41.63

PROP. ℄ C.R. 542
EXIST. ROW 60'
40' USUAL
20' USUAL
VARIES 24' TO 20'
12' TO 10' TRAVEL LANE
2.0%
PROP. ℄ C.R. 976
EXIST. ROW UNKNOWN
PROP. ℄ C.R. 544
EXIST. ROW 60'
32' USUAL
28' USUAL
PROP. ℄ ATLANTA DR.
EXIST. ROW 50'
25' USUAL
PROP. ℄ SAVANNAH DR.
EXIST. ROW 50'
12' TRAVEL LANE
SH 78
C.R. 542
Pvt. RD 5375
CEDAR ELM LN.
CEDAR RIDGE EASTATES
C.R. 544
ATLANTA DR.
SAVANNAH DR.
C.R. 976
ABSTON HILLS
LAVON CITY LIMITS
NEVADA CITY LIMITS
BEAR CREAK TRIBUTARY
100 YR FLOODPLAIN LIMITS ZONE A
TO LAVON
TO NEVADA
EXISTING ROW
PROPOSED ROW
CURVE - 01
CURVE - 02
CURVE - 03
CURVE - 04
CURVE - 05
CURVE - 06
CURVE - 07
CURVE - 08
WATER TANK
END PED RAIL STA 9+00.00
PROP. 8' X4' BOX CULVERT
BEGIN PED RAIL STA 7+75.00
EXIST 6'x5' BOX CULVERT TO REMAIN
EXISTING HEADWALL TO BE REMOVED
EXISTING RIGHT TURN TO BE REMOVED
END PED RAIL STA 8+60.00
EXIST 8'x4' BOX CULVERT TO BE REMOVED
BEGIN PED RAIL STA 8+05.00
PROP 3'x3' BOX CULVERT
EXISING 36" PIPE CULVERT TO BE REMOVED
BEGIN PED RAIL STA 36+95.00
END PED RAIL STA 37+65.00
EXIST 5'x5' BOX CULVERT TO BE REMOVED
BEGIN PED RAIL STA 54+20.00
END PED RAIL STA 54+95.00
BEGIN PED RAIL STA 53+40.00
PROP 7'x4' BOX CULVERT
END PED RAIL STA 54+65.00
EXIST 4'x3.5' BOX CULVERT TO BE REMOVED
BEGIN PED RAIL STA 77+51.00
PROP 5'x3' BOX CULVERT
END PED RAIL STA 78+00.00
BEGIN PED RAIL STA 77+00.00
DRAINAGE EASEMENT 25' OFFSET 0.011 ACRES
END PED RAIL STA 77+70.00
BEGIN PED RAIL STA 86+30.00
EXIST 8'x5' BOX CULVERT TO BE REMOVED
PROP 2-5'x4' BOX CULVERTS
END PED RAIL STA 87+36.00
BEGIN PED RAIL STA 84+95.00
END PED RAIL STA 86+10.00
DRAINAGE EASEMENT 10' OFFSET 0.019 ACRES
PROP 4'x2' BOX CULVERT
BEGIN PED RAIL STA 94+72.00
EXIST 4'x2' BOX CULVERT TO BE REMOVED
END PED RAIL STA 95+23.00
BEGIN PED RAIL STA 94+05.00
DRAINAGE EASEMENT 40' OFFSET 0.012 ACRES
END PED RAIL STA 94+70.00
PROP 2-5'x4' BOX CULVERTS
BEGIN PED RAIL STA 104+90.00
EXIST 8'x5' BOX CULVERT TO BE REMOVED
END PED RAIL STA 105+66.00
BEGIN PED RAIL STA 104+92.00
DRAINAGE EASEMENT 15' OFFSET 0.009 ACRES
END PED RAIL STA 105+95.00
N
MATCH LINE STA. 112+00
CSJ: 0619-01-027

PROPOSED C.R. 542 TYPICAL SECTION
STA 10+49.75 TO STA 11+41.55

PROPOSED C.R. 976 TYPICAL SECTION
STA 10+49.00 TO STA 12+73.71

PROPOSED C.R. 544 TYPICAL SECTION
STA 10+49.00 TO STA 11+78.77

PROPOSED ATLANTA DR. TYPICAL SECTION
STA 10+49.00 TO STA 11+86.58

PROPOSED SAVANNAH DR. TYPICAL SECTION
STA 10+49.23 TO STA 12+43.80

BEGIN PROJECT
MATCH EXISTING PAVEMENT
STA. 5+11.00
CSJ: 0619-01-027
BEGIN CONSTRUCTION

PARCEL ID	OWNER	LANDUSE
1	WILLIAM RONNY & CYNTHIA MCGUIRE	SINGLE FAMILY
2	LDC LAVON, LLC	FARMLAND
3	BLAKE MCCARTNEY, ETAL.	FARMLAND
4	DONALD THOMPSON	FARMLAND
5	DR HORTON-TEXAS LTD	RESIDENTAL
6	NEVADA IMPORT PARTS & AUTOS INC.	COMMERCIAL
7	DR HORTON-TEXAS LTD	RESIDENTAL
8	ACACIO HERNANDEZ	COMMERCIAL
9	DR HORTON-TEXAS LTD	RESIDENTAL
10	JOE BELLOWS	COMMERCIAL
11	DR HORTON-TEXAS LTD	RESIDENTAL
12	DR HORTON-TEXAS LTD	RESIDENTAL
13	SMITH-LISLE HOLDINGS LTD	COMMERCIAL
14	DR HORTON-TEXAS LTD	RESIDENTAL
15	THOMAS W. & SAUNDRA P. DONEGAN	FARMLAND
16	THOMAS W. & SAUNDRA P. DONEGAN	COMMERCIAL
17	DR HORTON-TEXAS LTD	RESIDENTAL
18	NEVADA SPECIAL UTILITY DISTRICT	GOVERNMENTAL
19	ABIGAIL NCHEKWUBE	COMMERCIAL
20	ALBERT & SHARONA MOKHTAR	FARMLAND
21	DR HORTON-TEXAS LTD	FARMLAND
22	CEDENO NATALIE D	FARMLAND
23	ALBERT & SHARONA MOKHTAR	FARMLAND
24	MILLER TS	COMMERCIAL

PARCEL ID	OWNER	LANDUSE
25	SISAN ABBAS KHADEMI	COMMERCIAL
26	SISAN ABBAS KHADEMI	SINGLE FAMILY
27	KINGSBRIDGE CONSTRUCTION, LLC	FARMLAND
28	JOHN A. YEAGER	FARMLAND
29	CHRISTOPHER ANTHONY PAGE	FARMLAND
30	BENSON HERMAN SR - LE	SINGLE FAMILY
31	CHRISTOPHER & VANETTE JONES	SINGLE FAMILY
32	KENNETH W. & JENNIFER WOLFE	SINGLE FAMILY
33	WAY JANEY PHARR	FARMLAND
34	CINDY ADAMS	SINGLE FAMILY

PARCEL ID	OWNER	LANDUSE
35	WAY JANEY PHARR	FARMLAND
36	BEN CASTILLO	SINGLE FAMILY
37	PHARR RAY DECKARD ET UX	SINGLE FAMILY
38	BILL & ALISA HALE	SINGLE FAMILY
39	PHARR RAY DECKARD	FARMLAND
40	ROBERT & PAMELA BLACKSTOCK	SINGLE FAMILY
41	TOTSY CLIFFORD PAGE	FARMLAND
42	MILFORD FOUNDERS LTD	FARMLAND
43	JANEY RUTH WAY, ET AL	FARMLAND
44	MOBLEY FAMILY LIVING TRUST	SINGLE FAMILY

PARCEL ID	OWNER	LANDUSE
45	JANEY R. WAY	SINGLE FAMILY
46	FOUST MELVIN J.	COMMERCIAL
47	JUAN VICENTE HERNANDEZ	COMMERCIAL
48	CHRISTOPHER ANTHONY PAGE	FARMLAND
49	CHRISTOPHER ANTHONY PAGE	FARMLAND
50	DALLAS DISTRICT CHURCH OF THE NAZARENE	CHURCH
51	LONE STAR COWBOY CHURCH	CHURCH
52	RICH D. ANDERTON	SINGLE FAMILY
53	JOSE & REINA ESTRADA MARTINEZ	SINGLE FAMILY
54	PHARR RAY DECKARD	FARMLAND
55	PHARR RAY DECKARD	FARMLAND
56	PHARR RAY DECKARD	FARMLAND
57	DIERDRE HARRIS	FARMLAND

TRAFFIC DIAGRAM

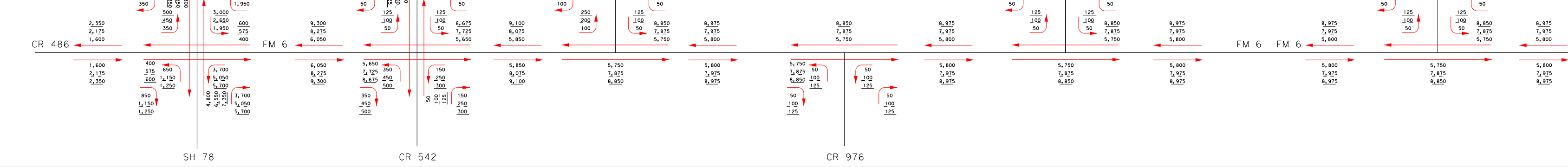
LEGEND SOURCE
XXXX - 2025 ADT
XXXX - 2045 ADT
XXXX - 2055 ADT
TPP, DALLAS DISTRICT
SH 78
CR 542
CEDAR ELM LN
CR 544
ATLANTA DR
SAVANNAH DR
CR 486
FM 6
CR 976

PROFILE LEGEND:

- PROPOSED PGL
- EXISTING NATURAL GROUND AT PGL
- 25 YR WATER SURFACE ELEVATION
- 100 YR WATER SURFACE ELEVATION

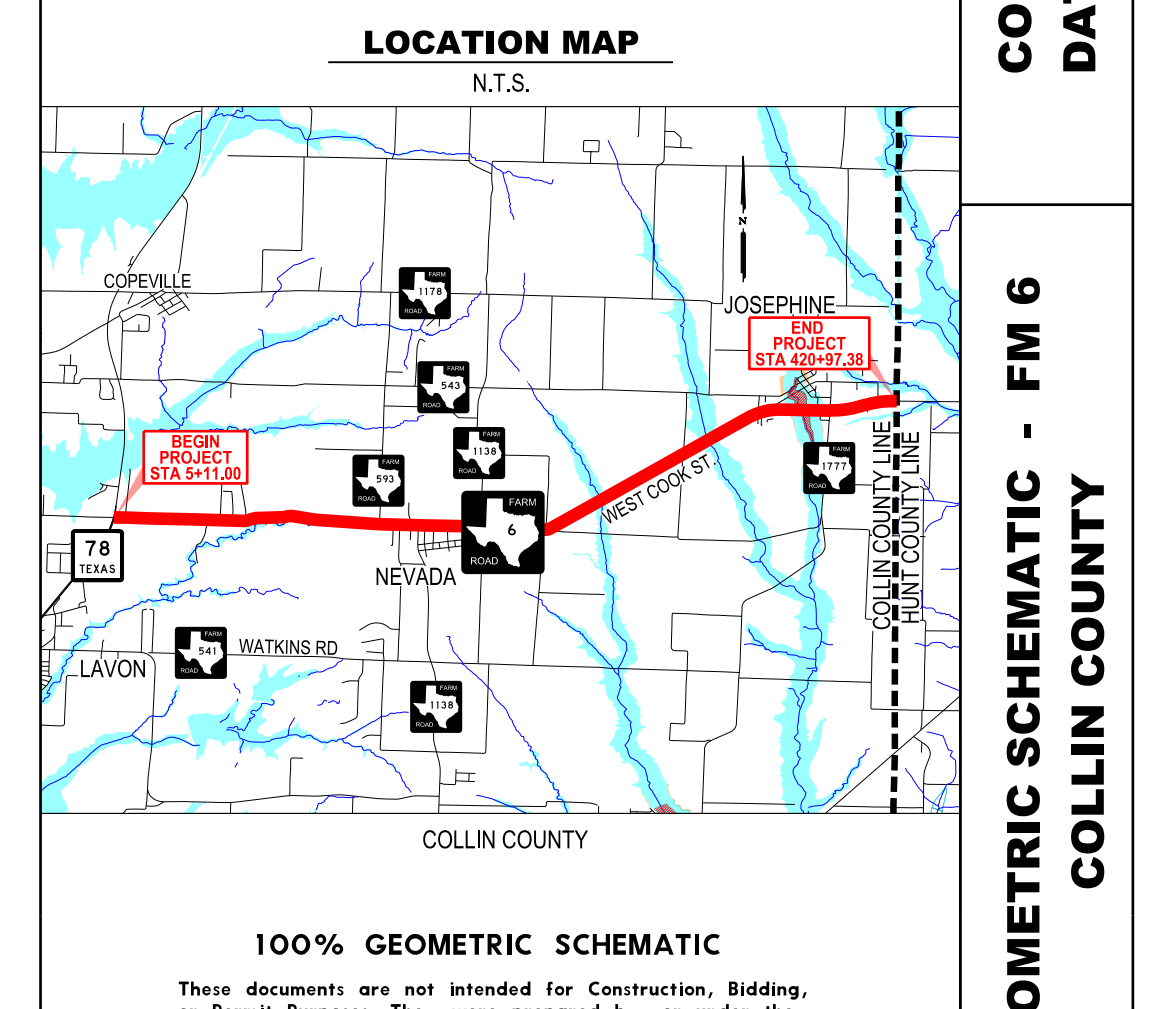
COPEVILLE
JOSEPHINE
END PROJECT STA 420+97.38
BEGIN PROJECT STA 5+11.00
78
NEVADA
WEST COOK ST
LAVON
WATKINS RD
COLLIN COUNTY LINE
HUNT COUNTY LINE

Texas Department of Transportation
© 2023

DALLAS DISTRICT
CEASON G CLEMENS, P.E., DISTRICT ENGINEER

DESIGN SCHEMATIC
FM 6
COLLIN COUNTY

CSJ: 0619-01-027
FROM: SH 78
TO: EAST OF FM 1777
NET LENGTH OF PROJECT = 7.88 MI
ROADWAY = 7.83 MI
BRIDGE = 0.05 MI

DESIGN CRITERIA:
FUNCTIONAL CLASSIFICATION: URBAN MAJOR COLLECTOR
TERRAIN: LEVEL
DESIGN SPEED: 45 MPH - URBAN STREET
DESIGN SPEED (CROSS ST): VARIES 30 MPH TO 55 MPH
ADT (2025) = 12,100
ADT (2045) = 16,550
ADT (2055) = 18,600

COUNTY: COLLIN
DATE: MAY 2023

LOCATION MAP
N.T.S.
COLLIN COUNTY

GEOMETRIC SCHEMATIC - FM 6
COLLIN COUNTY

100% GEOMETRIC SCHEMATIC
These documents are not intended for Construction, Bidding, or Permit Purposes. They were prepared by, or under the supervision of :
PETER G. JACOBS
67725
6/21/2023

ROLL 1 OF 4

ROLL INDEX:
ROLL 1: FM 6 MAINLANES STA. 4+63.51 TO STA. 112+00
ROLL 2: FM 6 MAINLANES STA. 112+00 TO STA. 220+00
ROLL 3: FM 6 MAINLANES STA. 220+00 TO STA. 328+00
ROLL 4: FM 6 MAINLANES STA. 328+00 TO STA. 420+97.38

HORIZONTAL SCALE
0 50 100 200 300
VERTICAL SCALE
0 5 10 20 30

ROLL 1 OF 4

KCI TECHNOLOGIES
ENGINEERS | PLANNERS | SCIENTISTS | CONSTRUCTION MANAGERS
13750 San Pedro Avenue, San Antonio, TX 78232
Phone: 210.544.5751
www.kci.com
TBPE Registration No. F-10573