Texas Department of Transportation © 2023

COUNTY: COLLIN
DATE: MAY 2023

GEOMETRIC SCHEMATIC - FM 6
COLLIN COUNTY

ROLL 4 OF 4

6/21/2023 12:04:22 PM

Texas Department of Transportation
© 2023

DALLAS DISTRICT
CEASON G CLEMENS, P.E., DISTRICT ENGINEER

DESIGN SCHEMATIC
FM 6
COLLIN COUNTY

CSJ: 0619-01-027
FROM: SH 78
TO: EAST OF FM 1777
NET LENGTH OF PROJECT = 7.88 MI
ROADWAY = 7.83 MI
BRIDGE = 0.05 MI

DESIGN CRITERIA:

FUNCTIONAL CLASSIFICATION:	URBAN MAJOR COLLECTOR
TERRAIN:	LEVEL
DESIGN SPEED:	45 MPH - URBAN STREET
DESIGN SPEED (CROSS ST):	VARIES 30 MPH TO 55 MPH

ADT (2025) = 12,100
ADT (2045) = 16,550
ADT (2055) = 18,600

LOCATION MAP

N.T.S.

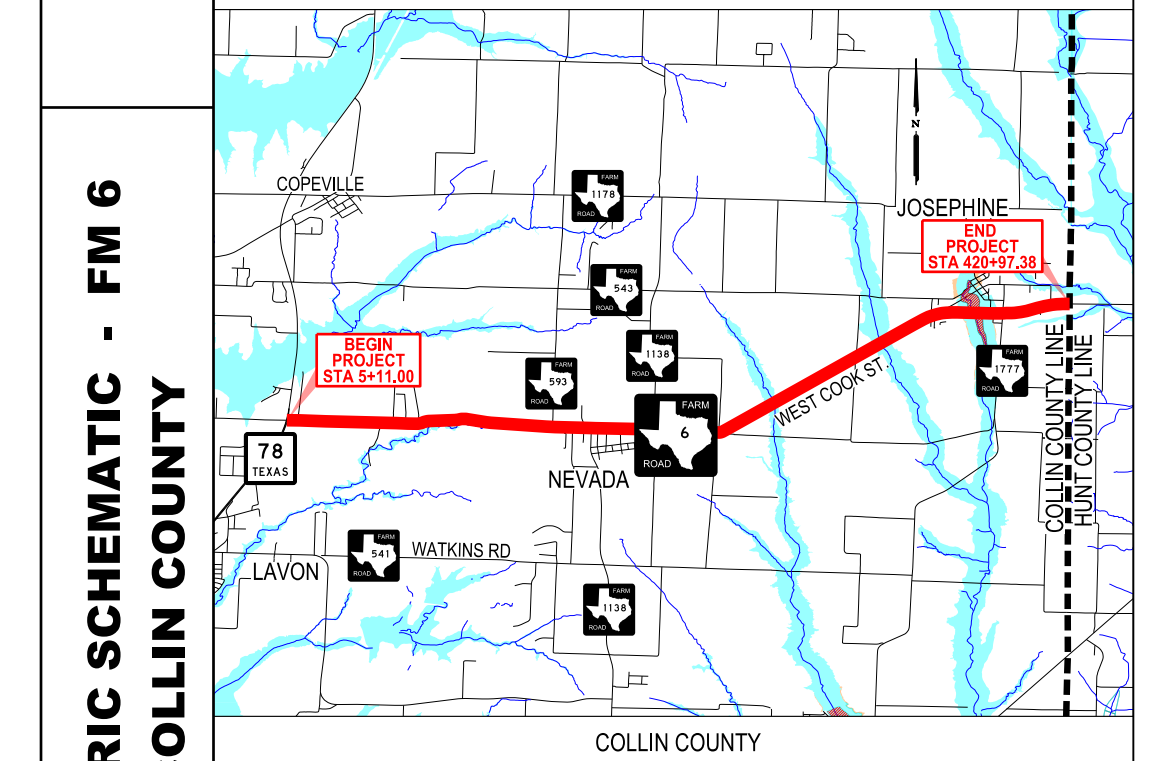
COPEVILLE
JOSEPHINE
END PROJECT STA 420+97.38
BEGIN PROJECT STA 5+11.00
78
NEVADA
WEST COOK ST
LAVON
WATKINS RD
COLLIN COUNTY LINE
HUNT COUNTY LINE

COLLIN COUNTY

100% GEOMETRIC SCHEMATIC

These documents are not intended for Construction, Bidding, or Permit Purposes. They were prepared by, or under the supervision of :

PETER G. JACOBS
67725
6/21/2023

ROLL INDEX:

ROLL 1: FM 6 MAINLANES
STA. 4+63.51 TO STA. 112+00

ROLL 2: FM 6 MAINLANES
STA. 112+00 TO STA. 220+00

ROLL 3: FM 6 MAINLANES
STA. 220+00 TO STA. 328+00

ROLL 4: FM 6 MAINLANES
STA. 328+00 TO STA. 420+97.38

HORIZONTAL SCALE
0 50 100 200 300

VERTICAL SCALE
0 5 10 20 30

ROLL 4 OF 4

KCI TECHNOLOGIES
ENGINEERS | PLANNERS | SCIENTISTS | CONSTRUCTION MANAGERS
13750 San Pedro Avenue, San Antonio, TX 78232
Phone: 210.544.5751
www.kci.com
TBPE Registration No. F-10573

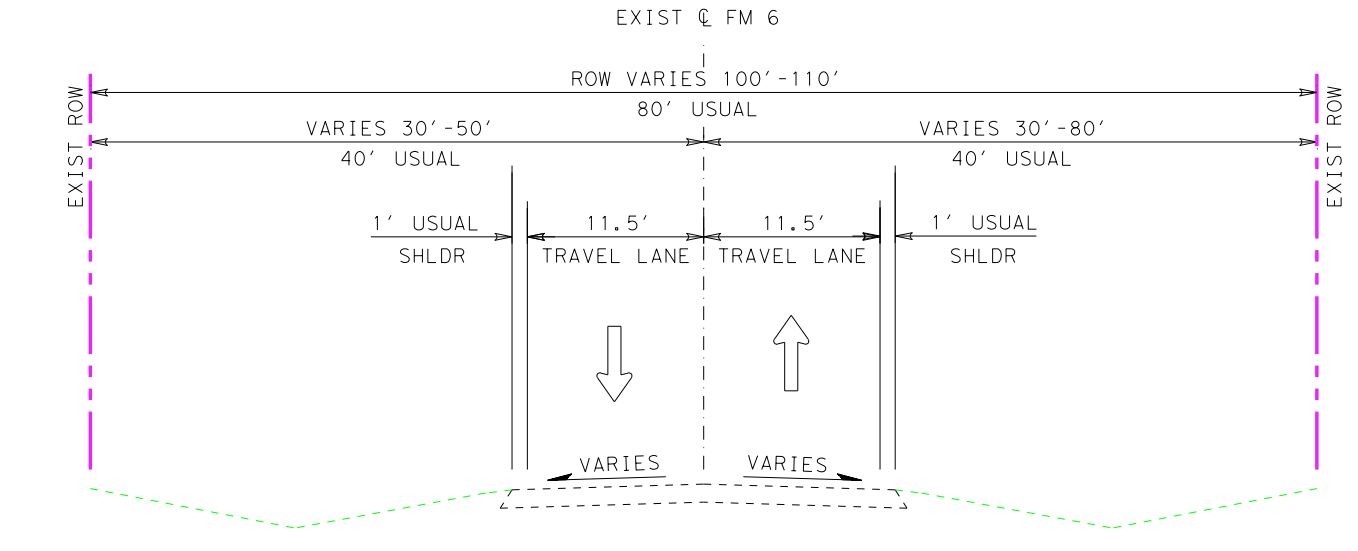
EXIST ℄ FM 6
EXIST ROW
ROW VARIES 100'-110'
80' USUAL
VARIES 30'-50'
40' USUAL
VARIES 30'-80'
40' USUAL
1' USUAL SHLDR
11.5' TRAVEL LANE
11.5' TRAVEL LANE
1' USUAL SHLDR
VARIES
VARIES

EXISTING TYPICAL SECTION
STA 328+00 TO STA 420+97

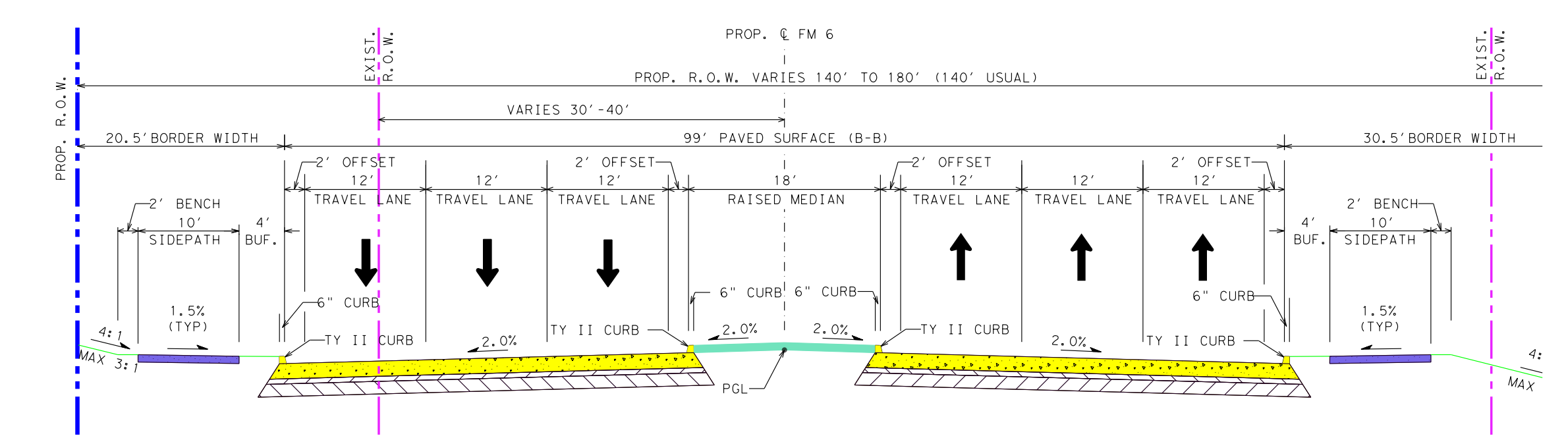
PROP. ℄ FM 6
PROP. R.O.W.
EXIST. R.O.W.
PROP. R.O.W. VARIES 140' TO 180' (140' USUAL)
VARIES 30'-40'
20.5' BORDER WIDTH
99' PAVED SURFACE (B-B)
30.5' BORDER WIDTH
2' BENCH
10' SIDEPATH
4' BUF.
2' OFFSET
12' TRAVEL LANE
12' TRAVEL LANE
12' TRAVEL LANE
18' RAISED MEDIAN
6" CURB
TY II CURB
1.5% (TYP)
2.0%
PGL
4:1
MAX 3:1
MAX

PROP TYP SECTION
140' PROPOSED ROW (MIN)
STA 358+72 TO STA 420+97

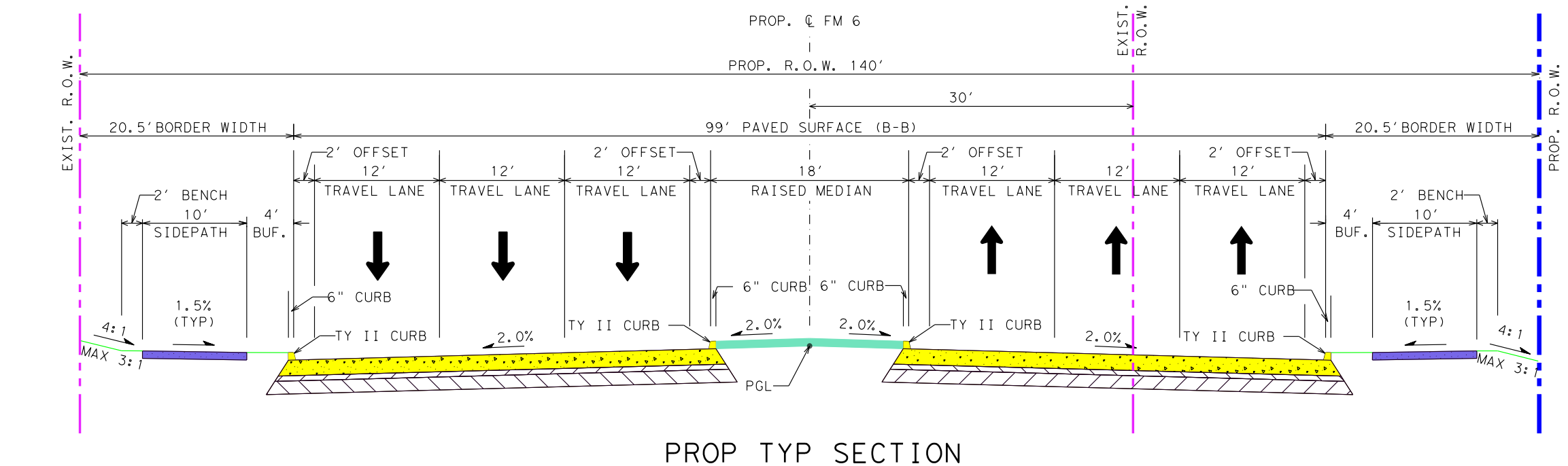
PROP. ℄ FM 6
EXIST. R.O.W.
PROP. R.O.W.
PROP. R.O.W. 140'
30'
20.5' BORDER WIDTH
99' PAVED SURFACE (B-B)
20.5' BORDER WIDTH
2' BENCH
10' SIDEPATH
4' BUF.
2' OFFSET
12' TRAVEL LANE
18' RAISED MEDIAN
6" CURB
TY II CURB
1.5% (TYP)
2.0%
PGL
4:1
MAX 3:1

PROP TYP SECTION
140' PROPOSED ROW (MIN)
STA 328+00 TO STA 358+72

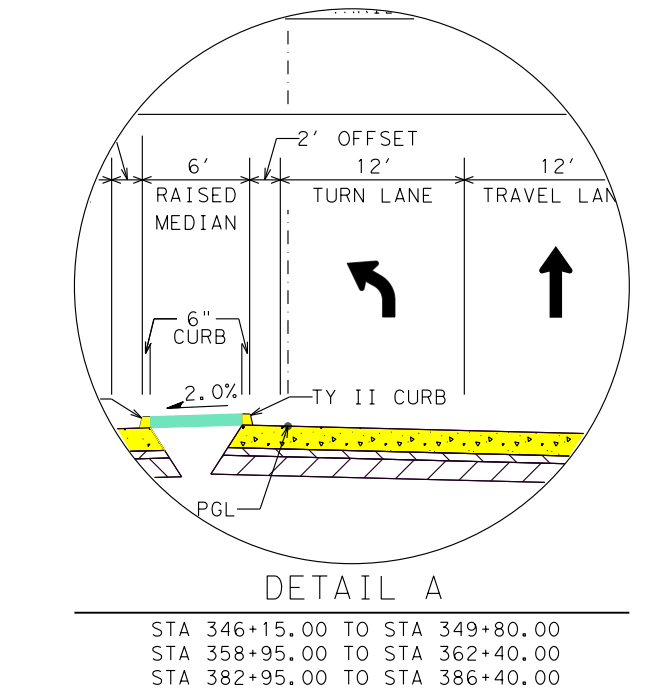
6' RAISED MEDIAN
2' OFFSET
12' TURN LANE
12' TRAVEL LANE
6" CURB
2.0%
TY II CURB
PGL

DETAIL A
STA 346+15.00 TO STA 349+80.00
STA 358+95.00 TO STA 362+40.00
STA 382+95.00 TO STA 386+40.00
STA 392+50.00 TO STA 396+00.00
STA 407+60.00 TO STA 411+10.00

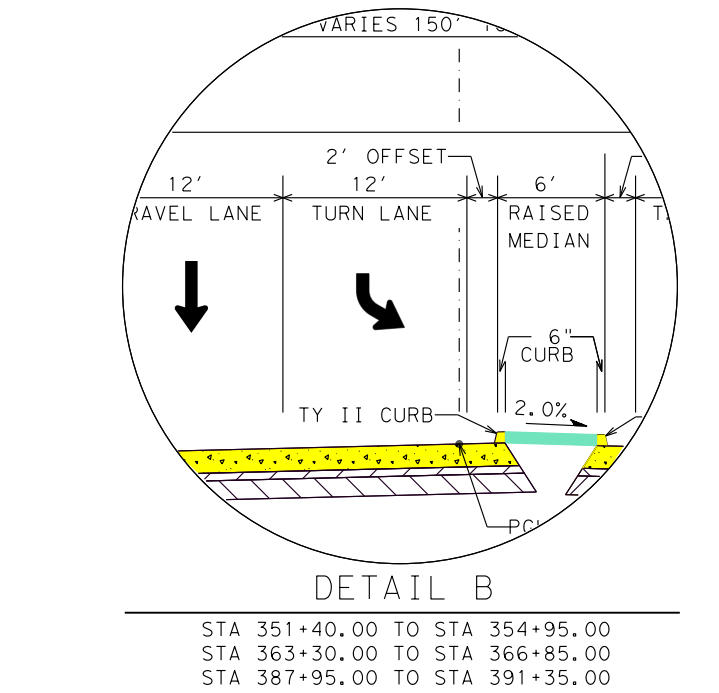
VARIES 150'
2' OFFSET
12' TRAVEL LANE
12' TURN LANE
6' RAISED MEDIAN
6" CURB
TY II CURB
2.0%
PGL

DETAIL B
STA 351+40.00 TO STA 354+95.00
STA 363+30.00 TO STA 366+85.00
STA 387+95.00 TO STA 391+35.00
STA 397+05.00 TO STA 400+50.00
STA 412+10.00 TO STA 415+65.00

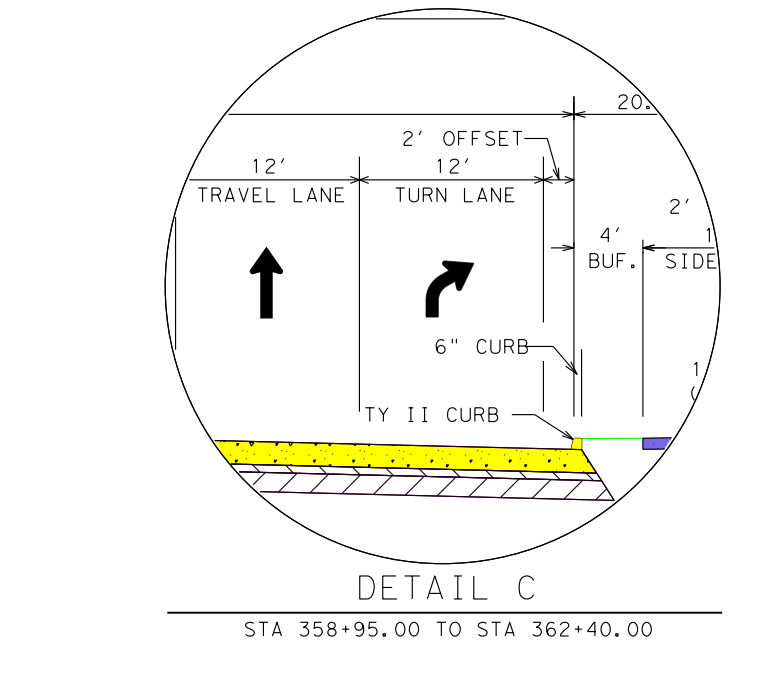
2' OFFSET
12' TRAVEL LANE
12' TURN LANE
4' BUF.
SIDE
6" CURB
TY II CURB

DETAIL C
STA 358+95.00 TO STA 362+40.00

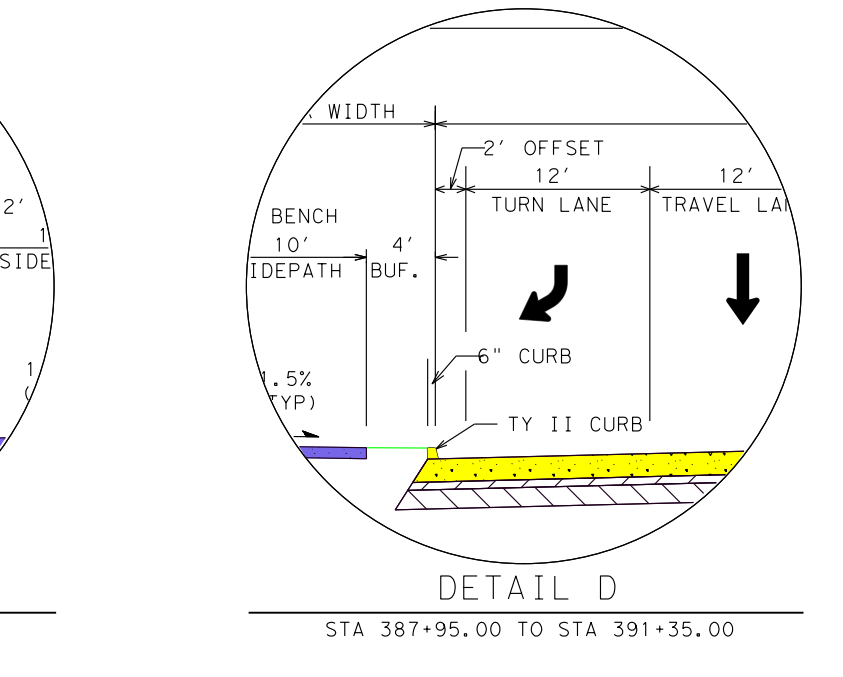
WIDTH
2' OFFSET
12' TURN LANE
12' TRAVEL LA
BENCH
10' SIDEPATH
4' BUF.
1.5% (TYP)
6" CURB
TY II CURB

DETAIL D
STA 387+95.00 TO STA 391+35.00

PLAN LEGEND:

- PROPOSED ℄
- PROPOSED R.O.W.
- PROPOSED DRAINAGE EASEMENT
- EXISTING R.O.W.
- PROPOSED PEDESTRIAN RAIL
- REGULATORY FLOODWAY
- 100 YR FLOODPLAIN LIMITS
- 500 YR FLOODPLAIN LIMITS
- PARCEL LINE
- COUNTY LINE
- PROPOSED DRAINAGE
- EXISTING DRAINAGE
- PROPOSED DIRECTION OF TRAVEL
- EXISTING DIRECTION OF TRAVEL
- PROPOSED BRIDGE
- PROPOSED ROADWAY
- PROPOSED DRIVEWAY
- PROPOSED SIDEPATH
- PROPOSED MEDIAN
- CEMETERY
- DISPLACEMENT
- POTENTIAL DISPLACEMENT
- SIDEWALK REMOVAL
- ROADWAY REMOVAL
- CURVE - ## CURVE ID
- ## PARCEL ID

PLAN LEGEND:

- C1 COMMUNICATIONS QL "B"
- C1 COMMUNICATIONS QL "C"/QL "D"
- E1 POWER LINE QL "B"
- E1 POWER LINE QL "C"/QL "D"
- G1 GAS LINE QL "B"
- G1 GAS LINE QL "C"/QL "D"
- WW1 SANITARY SEWER LINE QL "B"
- WW1 SANITARY SEWER LINE QL "C"/QL "D"
- SD1 STORM DRAIN LINE QL "B"
- SD1 STORM DRAIN LINE QL "C"/QL "D"
- W1 POTABLE WATER LINE QL "B"
- W1 POTABLE WATER LINE QL "C"/QL "D"
- X ABANDONED WATER LINE
- TS1 TRAFFIC SIGNAL LINE QL "B"
- TS1 TRAFFIC SIGNAL LINE QL "C"/QL "D"
- OH OVERHEAD UTILITY LINE
- PP POWER POLE
- FLOWLINE

GENERAL NOTES:

1. EXISTING FEATURES WERE NOT FIELD SURVEYED. SCHEMATICS ARE BASED ON AERIAL SURVEYS DATED 05-29 2020 AND RECORD PLANS.
2 FINAL LOCATION OF MEDIAN OPENINGS WILL BE DETERMINED IN THE PS&E DEVELOPMENT PHASE IN COORDINATION WITH THE LOCAL GOVERNMENTS.
3. SUPERELEVATION AXIS OF ROTATION IS ABOUT THE PGL.
4. DIMENSIONS ARE TO THE EDGE OF PAVEMENT OR NOMINAL FACE OF CURB, RAIL, BARRIER, OR WALL (UNLESS NOTED OTERWISE).
5. APPROXIMATE 100 YEAR FLOODPLAIN LIMITS ARE BASED UPON FEMA FLOOD INSURANCE RATE MAP 48085C0445J AND 48085C0465J, DATED JUNE 2, 2009.
6. OWNERSHIP INFORMATION SHOWN ON SCHEMATIC OBTAINED FROM, COLLIN COUNTY APPRAISAL DISTRICT. (LATEST DATA AVAILABLE AS OF SEPTEMBER 2022)
7. EXISTING CULVERT LOCATIONS, SIZE, AND ELEVATIONS OBTAINED FROM RECORD DOCUMENTS AND ARE SHOWN FOR INFORMATIONAL PURPOSES ONLY.
8. ADA RAMPS AND SIDEWALKS ARE DIAGRAMMATIC ONLY AND WILL BE DESIGNED DURING PS&E. SIDEWALKS ARE SHOWN ON TYPICAL SECTIONS.
9. EXISTING DRIVEWAYS WILL REMAIN UNLESS IT IS DETERMINED IN COORDINATION WITH THE LOCAL GOVENMENT THAT THE DRIVEWAY IS A SAFETY ISSUE AND/OR IS LOCATED WITHIN ACCESS DENIAL LIMITS.
10. PRIMARY BUILDINGS ARE SHOWN AS POTENTIAL DISPLACEMENT IF THE PROPOSED R.O.W. IS WITHIN 25' OF THE EXISTING BUILDING STRUCTURE.
11. CONVENTIONAL ROADWAY SIGNAGE (SMALL SIGNS) ARE NOT SHOWN AND WILL BE DEVELOPED DURING THE PS&E PHASE OF THE PROJECT.
12. EXISTING PAVEMENT/BRIDGES LOCATED WITHIN LIMITS OF PROPOSED RECONSTRUCTION WILL BE REMOVED (UNLESS NOTED OTHERWISE).
13. TYPICAL DRIVEWAY CURB RETURN RADII IS 15 FEET FOR RESIDENTIAL AND 30 FEET FOR CROSS STREETS UNLESS NOTED OTHERWISE.
14. CURBS ARE TYPE II (8") UNLESS NOTED OTHERWISE

CURVE DATA TABLE:

	CURVE - 17	CURVE - 18	CURVE - 19	CURVE - 20
PI STATION	329+40.51	354+72.56	393+22.62	412+68.84
DELTA	7° 57' 06.75" (RT)	35° 18' 00.00" (RT)	19° 27' 57.86" (LT)	18° 31' 00.00" (RT)
DEGREE OF CURVE	5° 30' 33.15"	1° 49' 08.09"	0° 57' 09.17"	1° 29' 31.48"
TANGENT	72.28	1,002.27	1,031.73	625.96
LENGTH	144.34	1,940.72	2,043.58	1,241.00
RADIUS	1,040.00	3,150.00	6,015.00	3,840.00
PC STATION	328+68.22	344+70.30	382+90.89	406+42.88
PT STATION	330+12.56	364+11.02	403+34.46	418+83.88

PROP. ℄ SEBASTIAN ST. (SOUTHSIDE)
EXIST. ROW 30'
15' USUAL
24'
12' TRAVEL LANE
2.0%
PROP. ℄ SEBASTIAN ST. (NORTHSIDE)
EXIST. ROW UNKNOWN
PROP. ℄ ROSE DR.
EXIST. ROW 60'
30' USUAL
37'
18.5'
PROP. ℄ C.R. 689
EXIST. ROW 40'
20' USUAL
PROP. ℄ PARK DR.
PROP. ℄ C.R. 547
EXIST. ROW 50'
25' USUAL
VARIES 24'-20'
12' TO 10'
PROP. ℄ YEATTS
VARIES 24' TO 16'
12' TO 8'
PROP. ℄ LLOYDS LN.
EXIST. ROW 35'
17.5' USUAL
PROP. ℄ E. C.R. 689
VARIES 24' TO 22'
12' TO 11'
100 YR FLOODPLAIN LIMITS
EXISTING NETEX R.R. ROW
NORTHEAST TEXAS RURAL RAIL TRANSPORTATION DISTRICT
EXISTING ROW
PROPOSED ROW
CURVE - 17
CURVE - 18
CURVE - 19
CURVE - 20
TO JOSEPHINE
MATCH LINE STA. 328+00
CSJ: 0619-01-027
MATCH LINE STA. 345+00
CSJ: 0619-01-027
SEBASTIAN ST.
SAVANNA DR.
ROSE DR.
PARK DR.
FOUNTAIN VIEW LN.
FOUNTAINVIEW LN.
JASIMINE CIR.
C.R. 689 (MILTON RD.)
WATER TANK
GAS STATION
R = 154'
R = 500'
500 YR FLOODPLAIN LIMITS ZONE X
100 YR FLOODPLAIN LIMITS ZONE AE
REGULATORY FLOODWAY
BEGIN BRIDGE CLASS CULVERT STA 372+06.88
END BRIDGE CLASS CULVERT STA 372+48.62
EXIST 4-6'x6' BOX CULVERTS TO BE REMOVED
PROP. 5-6'X6' BRIDGE CLASS CULVERTS
4.5" ATMOS NATURAL GAS PIPELINE
SABINE CREEK TRIBUTARY B
C.R. 547 (LOTTIE LN.)
YEATTS ST.
WORK TO BE DONE BY OTHERS
EXISTING CULVERT TO BE REMOVED
DE BERRY LN
PENNINGTON RD
DRIVEWAY CONSTRUCTED BY OTHERS
LLOYDS LN.
E. C.R. 689
NEWTON ST.
R=25'
END PROJECT
HUNT COUNTY LINE
STA. 420+97.38
CSJ: 0619-01-027
END CONSTRUCTION
COLLIN COUNTY LINE
HUNT COUNTY LINE
BRUSHY CREEK TRIBUTARY 15
N
FARM ROAD 6
FARM ROAD 1777

PROPOSED SEBASTIAN ST. TYPICAL SECTION
STA 10+54.13 TO STA 11+01.33

PROPOSED SEBASTIAN ST. TYPICAL SECTION
STA 10+49.55 TO STA 11+46.31

PROPOSED ROSE DR. TYPICAL SECTION
STA 10+49.02 TO STA 10+79.08

PROPOSED C.R. 689 TYPICAL SECTION
STA 10+58.71 TO STA 11+24.66

PROPOSED PARK DR. TYPICAL SECTION
STA 10+55.19 TO STA 11+26.03

PROPOSED C.R. 547 TYPICAL SECTION
STA 10+49.00 TO STA 11+64.24

PROPOSED YEATTS TYPICAL SECTION
STA 10+54.13 TO STA 11+01.33

PROPOSED LLOYDS LN. TYPICAL SECTION
STA 10+50.04 TO STA 10+81.74

PROPOSED E. C.R. 689 TYPICAL SECTION
STA 10+50.6 TO STA 11+13.13

PARCEL ID	OWNER	LANDUSE
151	FRIES ROBERT WILLIAM JR. & COLLEEN MARGARETTA	SINGLE FAMILY
152	PRESTWOOD COLBIE	SINGLE FAMILY
153	AUXILIADORA MARTINEZ	SINGLE FAMILY
154	ALLEN WAYNE H. & MARY E - LE	SINGLE FAMILY
155	ELAM ISAIAH JOEL & SAMANTHA CHRISTINE	SINGLE FAMILY
156	NORFLEET AVON & SHERRY - LE	SINGLE FAMILY
157	NORFLEET AVON & SHERRY - LE	SINGLE FAMILY
158	THOMAS WAYNE & JEANNIE GRAY PATTERSON	SINGLE FAMILY
159	THOMAS WAYNE & JEANNIE GRAY PATTERSON	SINGLE FAMILY
160	OWEN G. RUSHING	SINGLE FAMILY
161	KSHEMA, LLC	RESIDENTIAL
162	CITY OF JOSEPHINE	COMMERCIAL
163	WESLEY MARK IRELAND	SINGLE FAMILY
164	WARD JOSHUA DAVID	RESIDENTIAL
165	SHUMAN EDWIN	RESIDENTIAL
166	PERRY RYAN C & CHELSEY	RESIDENTIAL
167	BLANCO JENNYS PATRICIA PORTILLO	RESIDENTIAL
168	SMITH ERICK JOE & MONIQUE ROCKETT GILSTRAP	RESIDENTIAL
169	COCKRELL CODY B & CHRISTEN N	RESIDENTIAL
170	WINK JAMES M	RESIDENTIAL

PARCEL ID	OWNER	LANDUSE
171	PENA JESSE	RESIDENTIAL
172	COLLINS JASON A & JAMIE E	RESIDENTIAL
173	WHITEMAN ANQUENETTE S	RESIDENTIAL
174	CATALANO MARK BRIAN	RESIDENTIAL
175	ANDERSON RINA	RESIDENTIAL
176	WELCH BILL	RESIDENTIAL
177	GARZA CHRISTOPHER MICHAEL	RESIDENTIAL
178	AVELAR HERNAN & BLANCA E	RESIDENTIAL
179	VEA MATTHEW B	RESIDENTIAL
180	SAM LASHGARI	FARMLAND
181	ROUTE 61 CORPORATION	COMMERCIAL
182	ROUTE 61 CORPORATION	FARMLAND
183	STEWART ANDREA N	RESIDENTIAL
184	ESTRELLO AMANDA R	RESIDENTIAL
185	WELCH BILL	RESIDENTIAL
186	FOUNTAIN VIEW NEIGHBORHOOD ASSOCIATION	FARMLAND
187	LYNN GOSSETT THURMAN	FARMLAND
188	WALTER K. LEESON	FARMLAND
189	WALTER K. LEESON	FARMLAND
190	HESS LINDA JANE	FARMLAND

PARCEL ID	OWNER	LANDUSE
191	WILLIAM E. GAY	SINGLE FAMILY
192	JOSEY HUB LP	SINGLE FAMILY
193	VINCE R. & KATHY L. MARSHALL	RESIDENTIAL
194	VINCE R. & KATHY L. MARSHALL	RESIDENTIAL
195	VINCE R. & KATHY L. MARSHALL	RESIDENTIAL
196	SAMANTHA L. BROOKS	RESIDENTIAL
197	BRITTANY LEDALE BARCHEERS	RESIDENTIAL
198	MA ESTHER DE LA TORRE	RESIDENTIAL
199	CHARLENE W. ROGERS	RESIDENTIAL
200	B BARKLEY & ASSO INC	RESIDENTIAL
201	HENDERSON WILLIE - LE	RESIDENTIAL
202a	BARKLEY BRIGITTE & CLAY BARKLEY	RESIDENTIAL
202b	DZIATKU HOLDINGS LLC - SERIES J2	RESIDENTIAL
203	PATRICIA GUSTAFSON	RESIDENTIAL
204	FOREST E. MCBRIDE	RESIDENTIAL
205	BRENDA P. HOLMES ET AL	RESIDENTIAL
206	LYNN GILBREATH	RESIDENTIAL
207	MELISSA ANN HOLMES	RESIDENTIAL
208	FLOR DE MARIA CAMACHO	RESIDENTIAL
209	HP INVESTMENTS, LLC	COMMERCIAL
210	MIS, LLC	FARMLAND

PARCEL ID	OWNER	LANDUSE
211	AHKD ENTERPRISES, LLC	SINGLE FAMILY
212	RONNIE DALE GILMORE	SINGLE FAMILY
213	MICHAEL J. HECKS	SINGLE FAMILY
214	ERIC K. MCCLENDON	SINGLE FAMILY
215	ERIC K. MCCLENDON	SINGLE FAMILY
216	ERIC & SHARI MCCLENDON	SINGLE FAMILY
217	SHEPHERD PLACE HOMES, INC.	SINGLE FAMILY
218	LIGHTSEY JASON	SINGLE FAMILY
219	KENNETH E. & AMY T. HOLMES	SINGLE FAMILY
220	SHARON MCKINNEY	SINGLE FAMILY
221	BETA TRUST	SINGLE FAMILY
222	RIGOBERTO & ZULEMA G. ORTIZ	SINGLE FAMILY
223	JONNY M. & CAROLYN D. BOLES	SINGLE FAMILY
224	LISA ROBIE	SINGLE FAMILY
225	TANNER D. MORELAND	RESIDENTIAL
226	AB PETROLEUM, INC.	FARMLAND
227	BURNSIDE ORGANIZATION, LLC	FARMLAND
228	DANNY L. & BRENDA J. MOORE	SINGLE FAMILY
229	OWNER OF RECORD	SINGLE FAMILY
230	NEWTON TOM & BARBARA - LE	SINGLE FAMILY
231	NEWTON TOM & BARBARA - LE	SINGLE FAMILY
232	NEWTON JOHN WADE & SHARON	SINGLE FAMILY
233	DEBORAH GAIL WRIGHT	COMMERCIAL
234	STEPHEN DEAN HOMES, INC.	FARMLAND

TRAFFIC DIAGRAM

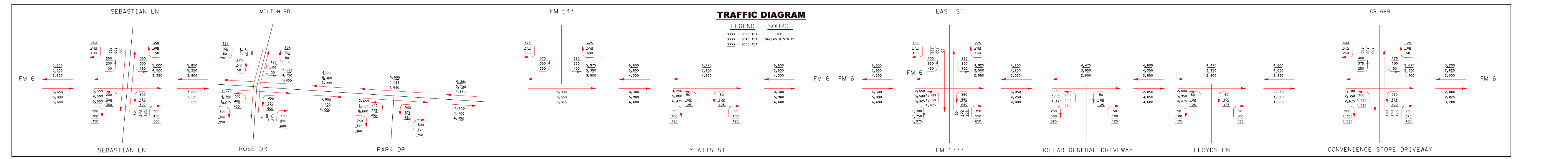
LEGEND SOURCE
XXXX - 2025 ADT
XXXX - 2045 ADT
XXXX - 2055 ADT
TPP, DALLAS DISTRICT
SEBASTIAN LN
MILTON RD
FM 547
EAST ST
CR 689
FM 6
ROSE DR
PARK DR
YEATTS ST
FM 1777
DOLLAR GENERAL DRIVEWAY
LLOYDS LN
CONVENIENCE STORE DRIVEWAY

PROFILE LEGEND:

- PROPOSED PGL
- EXISTING NATURAL GROUND AT PGL
- 25 YR WATER SURFACE ELEVATION
- 100 YR WATER SURFACE ELEVATION

Texas Department of Transportation
© 2023

DALLAS DISTRICT
CEASON G CLEMENS, P.E., DISTRICT ENGINEER

DESIGN SCHEMATIC
FM 6
COLLIN COUNTY

CSJ: 0619-01-027
FROM: SH 78
TO: EAST OF FM 1777
NET LENGTH OF PROJECT = 7.88 MI
ROADWAY = 7.83 MI
BRIDGE = 0.05 MI

DESIGN CRITERIA:

FUNCTIONAL CLASSIFICATION: URBAN MAJOR COLLECTOR
TERRAIN: LEVEL
DESIGN SPEED: 45 MPH - URBAN STREET
DESIGN SPEED (CROSS ST): VARIES 30 MPH TO 55 MPH

ADT (2025) = 12,100
ADT (2045) = 16,550
ADT (2055) = 18,600

LOCATION MAP
N.T.S.
COLLIN COUNTY

100% GEOMETRIC SCHEMATIC
These documents are not intended for Construction, Bidding, or Permit Purposes. They were prepared by, or under the supervision of :
PETER G. JACOBS
67725
6/21/2023

ROLL INDEX:
ROLL 1: FM 6 MAINLANES STA. 4+63.51 TO STA. 112+00
ROLL 2: FM 6 MAINLANES STA. 112+00 TO STA. 220+00
ROLL 3: FM 6 MAINLANES STA. 220+00 TO STA. 328+00
ROLL 4: FM 6 MAINLANES STA. 328+00 TO STA. 420+97.38

HORIZONTAL SCALE 0 50 100 200 300
VERTICAL SCALE 0 5 10 20 30
ROLL 4 OF 4

KCI TECHNOLOGIES
ENGINEERS | PLANNERS | SCIENTISTS | CONSTRUCTION MANAGERS
13750 San Pedro Avenue, San Antonio, TX 78232
Phone: 210.544.5751
www.kci.com
TBPE Registration No. F-10573

COUNTY: COLLIN
DATE: MAY 2023
GEOMETRIC SCHEMATIC - FM 6
COLLIN COUNTY
ROLL 4 OF 4

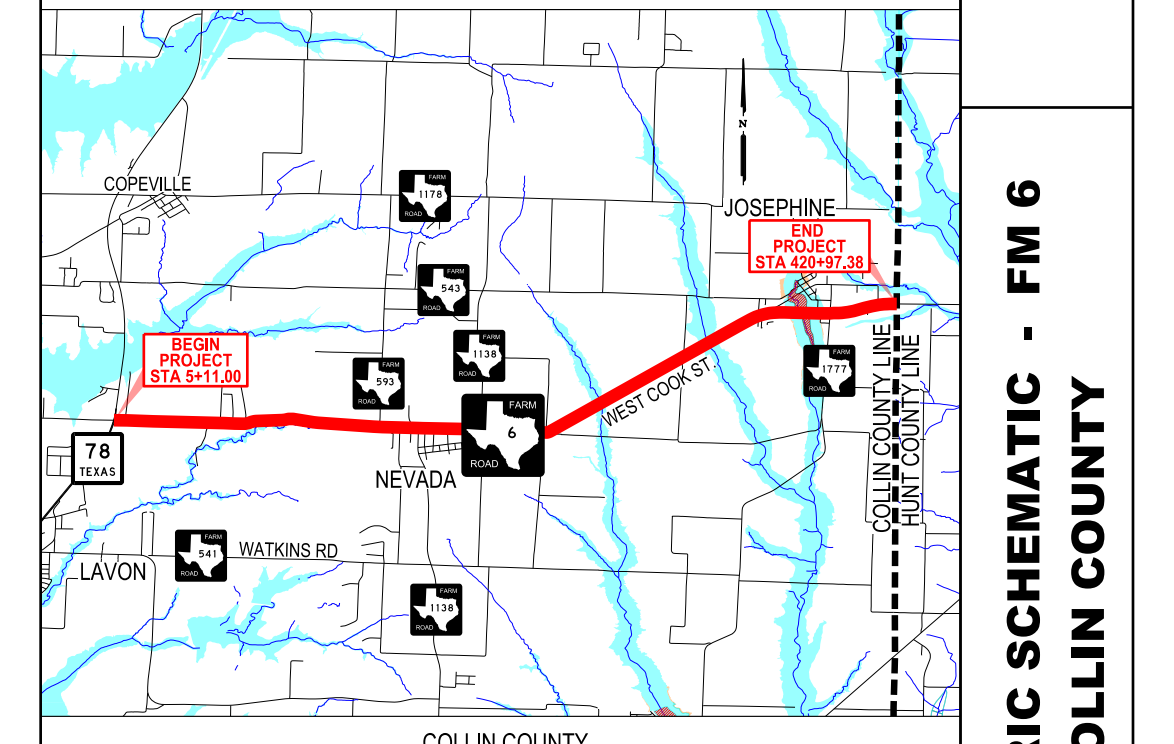
COPEVILLE
JOSEPHINE
END PROJECT STA 420+97.38
BEGIN PROJECT STA 5+11.00
78
NEVADA
WEST COOK ST
LAVON
WATKINS RD
COLLIN COUNTY LINE
HUNT COUNTY LINE