**Texas Department of Transportation**

© 2020 BY TEXAS DEPARTMENT OF TRANSPORTATION
ALL RIGHTS RESERVED

DALLAS DISTRICT
CONCEPTUAL SCHEMATIC
MOHAMED K. BUR, P.E., DISTRICT ENGINEER
KAUFMAN COUNTY
FM 741
PROJECT LIMIT: FROM US 175
TO FM 548
CSJ: 1092-01-021
FM 741 FUNCTIONAL CLASS: URBAN ARTERIAL
DESIGN SPEED: 45 MPH FM 741
30 MPH CROSS STREETS
PROJECT LENGTH: 7.717 MILES
WIDEN 2 LANE ROADWAY TO 4 LANE DIVIDED

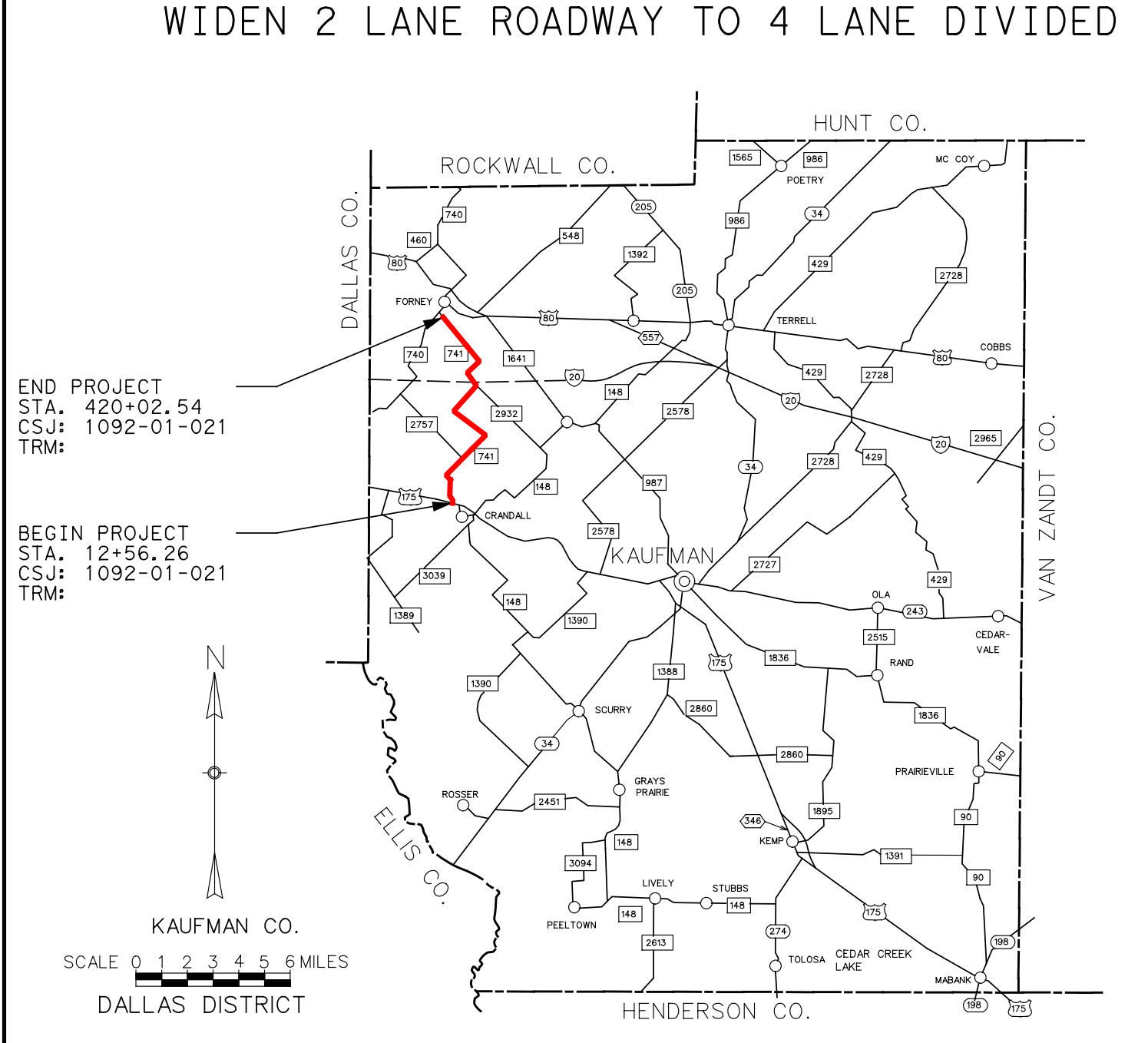
HUNT CO.
ROCKWALL CO.
DALLAS CO.
VAN ZANDT CO.
END PROJECT
STA. 420+02.54
CSJ: 1092-01-021
TRM:
BEGIN PROJECT
STA. 12+56.26
CSJ: 1092-01-021
TRM:
FORNEY
CRANDALL
KAUFMAN
TERRELL
ELLIS CO.
KAUFMAN CO.
SCALE 0 1 2 3 4 5 6 MILES
DALLAS DISTRICT
HENDERSON CO.
N

LOCATION MAP

**30% SCHEMATIC**

THESE DOCUMENTS ARE FOR INTERIM REVIEW AND ARE NOT INTENDED FOR REGULATORY APPROVAL, PERMIT, BIDDING OR CONSTRUCTION PURPOSES. THEY WERE PREPARED BY OR UNDER THE SUPERVISION OF:

| NAME | P.E. NO. | DATE |
|---|---|---|
| ABENET BEKELE | 86055 | 9/17/20 |

SEPTEMBER 2020
SCALE: 1"=100'
ROLL 5 OF 7

SHEET INDEX

ROLL 1: PLAN AND PROFILE - BEGIN PROJECT TO NORTH OF VENNER CIRCLE
ROLL 2: PLAN AND PROFILE - NORTH OF VENNER CIRCLE TO NORTH OF FM 2757
ROLL 3: PLAN AND PROFILE - NORTH OF FM 2757 TO NORTH OF COUNTY WOODS ROAD
ROLL 4: PLAN AND PROFILE - NORTH OF COUNTY WOODS ROAD TO NORTH OF SUNNYBROOK DRIVE
ROLL 5: PLAN AND PROFILE - NORTH OF SUNNYBROOK DRIVE TO NORTH OF LEONA STREET
ROLL 6: PLAN AND PROFILE - NORTH OF LEONA STREET TO NORTH OF GOLDEN MEADOW LANE
ROLL 7: PLAN AND PROFILE - NORTH OF GOLDEN MEADOW LANE TO SOUTH OF FM 548

0' 50' 100' 200'
HORIZONTAL
0' 5' 10' 20'
VERTICAL
GRAPHIC SCALES IN FEET

Lockwood, Andrews & Newnam, Inc.
A LEO A DALY COMPANY
TBPE FIRM REGISTRATION NO. 2614

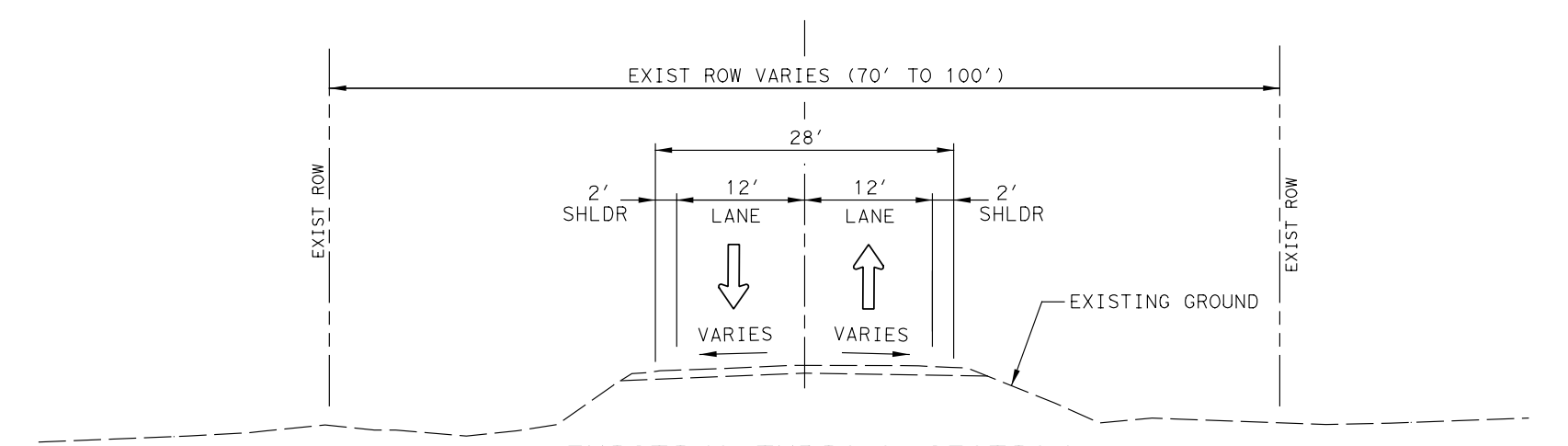
℄ FM 741
EXIST ROW VARIES (70' TO 100')
28'
2' SHLDR
12' LANE
12' LANE
2' SHLDR
VARIES
VARIES
EXIST ROW
EXISTING GROUND

EXISTING TYPICAL SECTION
BEGIN PROJECT TO END PROJECT

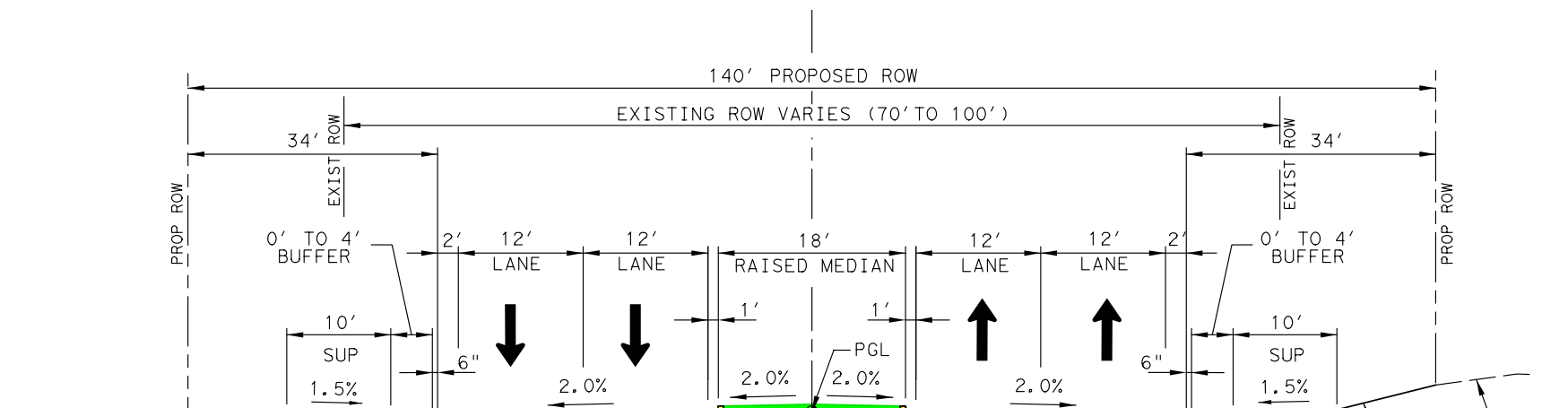
℄ FM 741
140' PROPOSED ROW
EXISTING ROW VARIES (70' TO 100')
34'
0' TO 4' BUFFER
10' SUP
1.5%
12' LANE
12' LANE
18' RAISED MEDIAN
2.0%
PGL
6"
3:1 MAX 4:1 USUAL
PROP ROW
EXIST ROW
EXISTING GROUND

PROPOSED TYPICAL SECTION
STA 12+98.14 TO STA 13+84.00
STA 17+79.00 TO STA 53+52.00
STA 60+75.00 TO STA 106+48.00

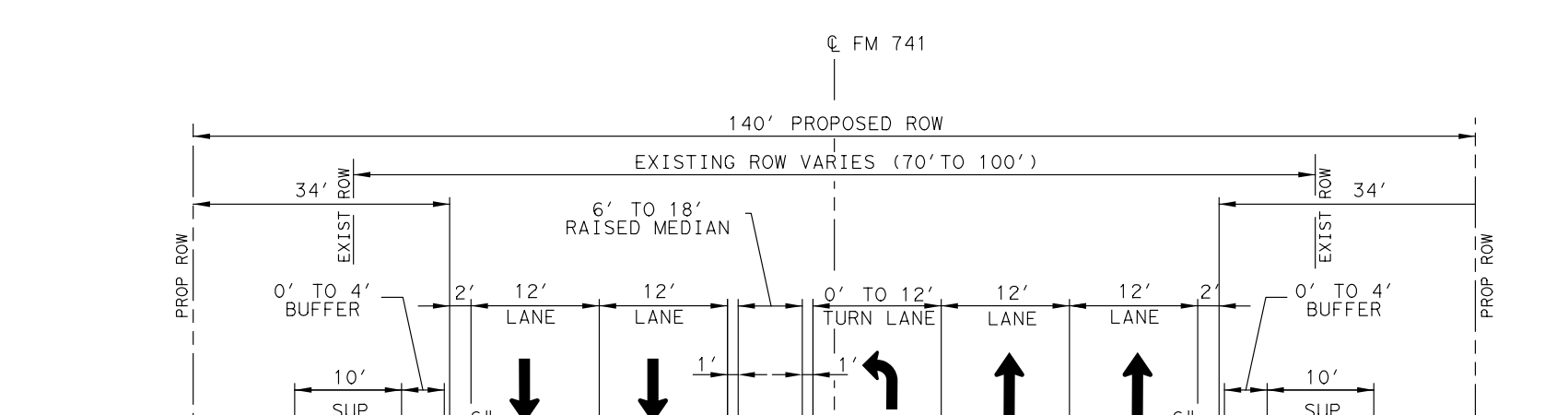
℄ FM 741
140' PROPOSED ROW
EXISTING ROW VARIES (70' TO 100')
34'
6' TO 18' RAISED MEDIAN
0' TO 4' BUFFER
10' SUP
1.5%
12' LANE
0' TO 12' TURN LANE
2.0%
PGL
3:1 MAX 4:1 USUAL
EXISTING GROUND

PROPOSED TYPICAL SECTION
WITH NB LEFT TURN LANE
STA 13+84.00 TO STA 17+79.00
STA 53+52.00 TO STA 60+75.00
STA 106+48.00 TO STA 111+58.00

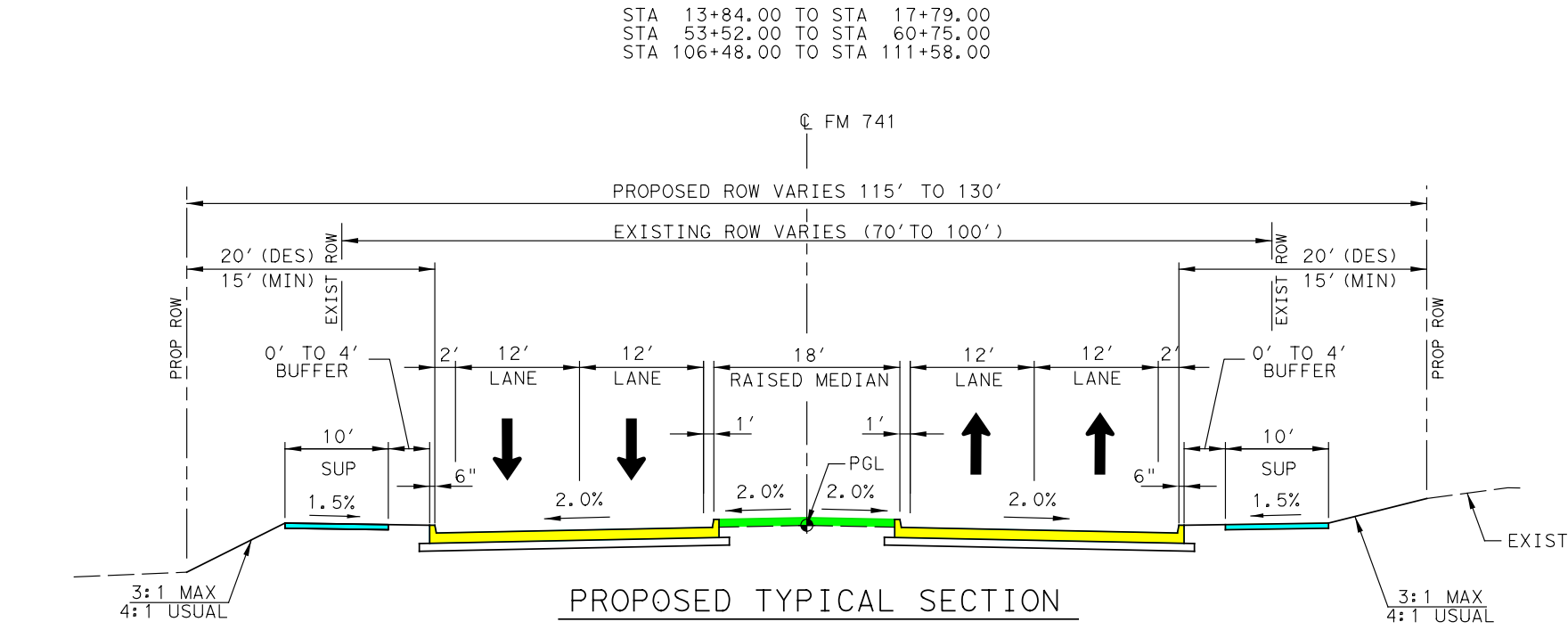
℄ FM 741
PROPOSED ROW VARIES 115' TO 130'
EXISTING ROW VARIES (70' TO 100')
20' (DES) 15' (MIN)
0' TO 4' BUFFER
10' SUP
1.5%
12' LANE
18' RAISED MEDIAN
2.0%
PGL
3:1 MAX 4:1 USUAL
EXISTING GROUND

PROPOSED TYPICAL SECTION

| | | |
|---|---|---|
| STA 111+58.00 TO STA 154+11.00 | STA 258+21.21 TO STA 258+40.21 | STA 317+25.26 TO STA 318+64.26 |
| STA 159+06.00 TO STA 172+50.00 | STA 267+71.21 TO STA 285+44.71 | STA 323+61.92 TO STA 341+93.63 |
| STA 175+00.00 TO STA 189+88.12 | STA 290+39.37 TO STA 296+15.20 | STA 347+11.51 TO STA 363+43.04 |
| STA 194+83.12 TO STA 198+30.00 | STA 301+50.93 TO STA 304+61.81 | STA 368+88.04 TO STA 389+05.04 |
| STA 200+80.00 TO STA 218+80.21 | | STA 394+00.04 TO STA 398+75.04 |
| STA 228+10.21 TO STA 240+69.21 | | STA 403+80.04 TO STA 406+79.04 |
| STA 246+14.21 TO STA 251+86.21 | | STA 411+74.04 TO STA 420+01.54 |

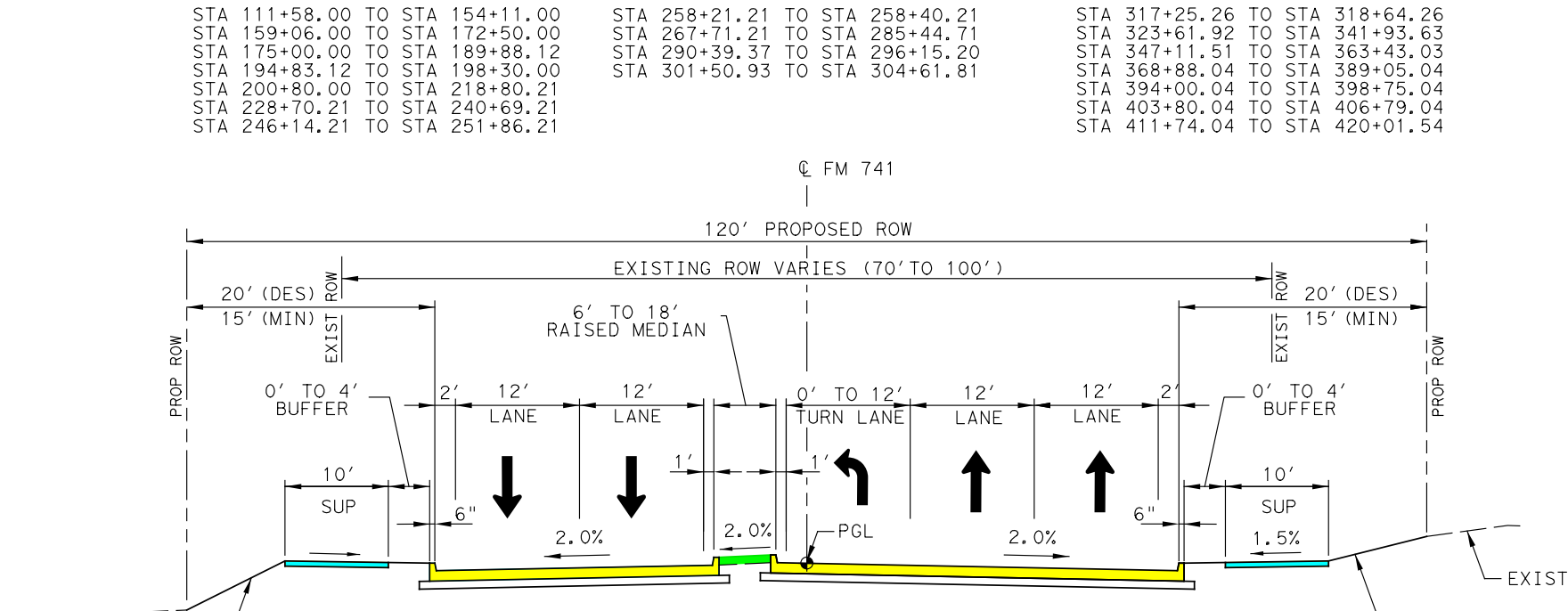
℄ FM 741
120' PROPOSED ROW
EXISTING ROW VARIES (70' TO 100')
20' (DES) 15' (MIN)
6' TO 18' RAISED MEDIAN
0' TO 4' BUFFER
10' SUP
12' LANE
0' TO 12' TURN LANE
2.0%
PGL
3:1 MAX 4:1 USUAL
EXISTING GROUND

PROPOSED TYPICAL SECTION
WITH NB LEFT TURN LANE

| | |
|---|---|
| STA 13+84.00 TO STA 17+79.00 | STA 240+69.21 TO STA 246+14.21 |
| STA 55+80.00 TO STA 60+75.00 | STA 254+54.06 TO STA 258+21.21 |
| STA 106+48.00 TO STA 111+58.00 | STA 258+40.21 TO STA 262+91.41 |
| STA 154+11.00 TO STA 159+06.00 | STA 318+64.26 TO STA 323+61.92 |
| STA 218+80.21 TO STA 223+75.03 | STA 363+43.04 TO STA 368+88.04 |

LEGEND

| | |
|---|---|
| → | DIRECTION OF TRAFFIC |
| — · — · — | EXISTING ROW |
| ▨ | EXISTING CROSS STREET PAVEMENT TO BE REMOVED |
| — — — | PROPOSED ROW |
| 🟨 | PROPOSED MAIN LANE PAVEMENT |
| 🟥 | PROPOSED BRIDGE |
| 🟪 | PROPOSED CROSS STREET PAVEMENT |
| 🟦 | PROPOSED SIDEWALK |
| 🟩 | PROPOSED MEDIAN |
| 🟧 | PROPOSED DRIVEWAY |
| 🟦 | DISPLACEMENTS |
| ▨ | 100 YEAR FLOODPLAIN LIMITS |
| — — — | CITY LIMIT LINE |

NOTES:

1. THE DESIGN SCHEMATICS WERE BASED ON FIELD SURVEY AND AERIAL SURVEY DATED APRIL 13, 2020.
2. OWNERSHIP INFORMATION SHOWN ON THE SCHEMATICS WERE OBTAINED FROM KAUFMAN COUNTY APPRAISAL DISTRICT (JUNE, 2020).
3. APPROXIMATE 100 YEAR FLOODPLAIN LIMITS WERE BASED ON FEMA FLOOD INSURANCE RATE MAP.
4. BUILDINGS ARE SHOWN AS POTENTIAL DISPLACEMENTS IF THE PROPOSED ROW PHYSICALLY INTERSECTS THE EXISTING BUILDING STRUCTURE.
5. PROPOSED CURBS ARE TYPE II UNLESS STATED OTHERWISE.
6. EXISTING SKEWED INTERSECTIONS WERE REALIGNED TO IMPROVE SAFETY AT INTERSECTIONS.
7. ADA RAMPS AND SIDEWALKS ARE DIAGRAMMATIC ONLY AND WILL BE DESIGNED DURING PS&E. SIDEWALKS ARE SHOWN ON THE TYPICAL SECTIONS AND PLAN VIEW.
8. TRAFFIC PROJECTIONS ARE CURRENTLY IN PROGRESS. TRAFFIC STICK-DIAGRAMS WILL BE PROVIDED IN THE 60% SCHEMATIC.
9. CONVENTIONAL ROADWAY SIGNAGE (SMALL SIGNS) ARE NOT SHOWN AND WILL BE DEVELOPED DURING THE PS&E PHASE OF THE PROJECT.
10. FINAL LOCATIONS OF MEDIAN OPENINGS WILL BE DETERMINED IN THE PS&E DEVELOPMENT PHASE IN COORDINATION WITH THE CITY OF FORNEY AND KAUFMAN COUNTY.

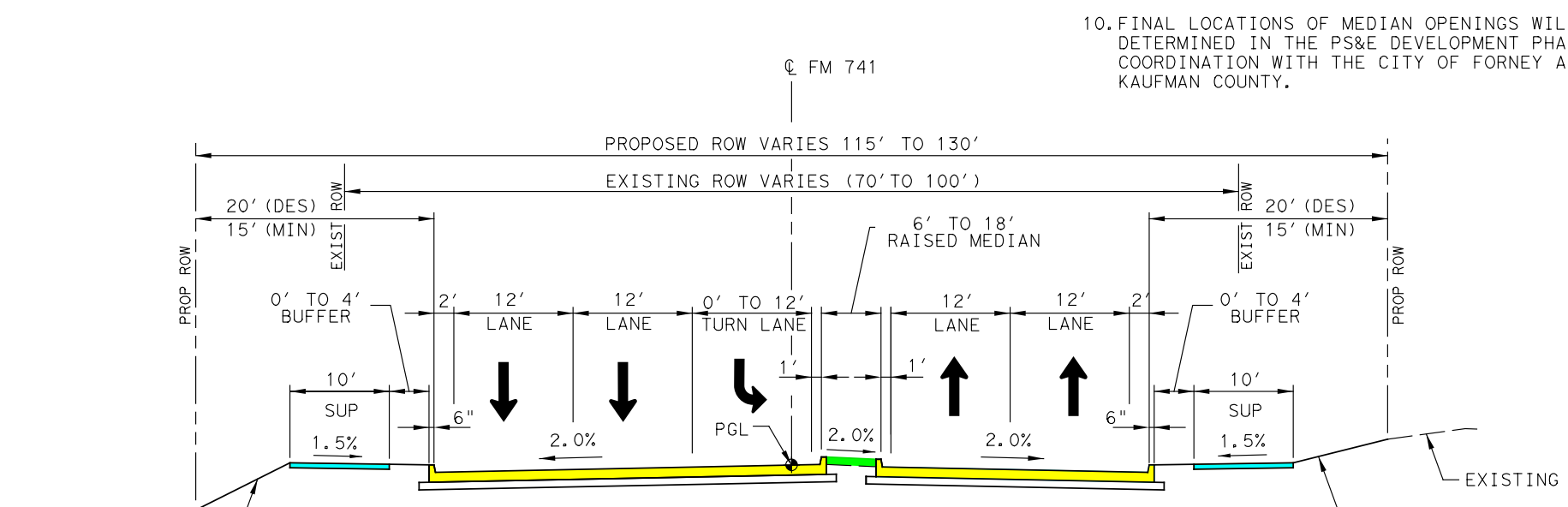
℄ FM 741
PROPOSED ROW VARIES 115' TO 130'
EXISTING ROW VARIES (70' TO 100')
20' (DES) 15' (MIN)
6' TO 18' RAISED MEDIAN
0' TO 4' BUFFER
10' SUP
1.5%
12' LANE
0' TO 12' TURN LANE
2.0%
PGL
3:1 MAX 4:1 USUAL
EXISTING GROUND

PROPOSED TYPICAL SECTION
WITH SB LEFT TURN LANE

| | |
|---|---|
| STA 189+88.12 TO STA 194+83.12 | STA 296+15.20 TO STA 301+50.93 |
| STA 223+75.03 TO STA 228+10.21 | STA 341+93.63 TO STA 347+11.51 |
| STA 251+86.21 TO STA 255+53.71 | STA 389+05.04 TO STA 394+00.04 |
| STA 262+91.41 TO STA 267+71.21 | STA 398+75.04 TO STA 403+79.04 |
| STA 285+44.71 TO STA 290+39.37 | STA 406+79.04 TO STA 411+74.04 |

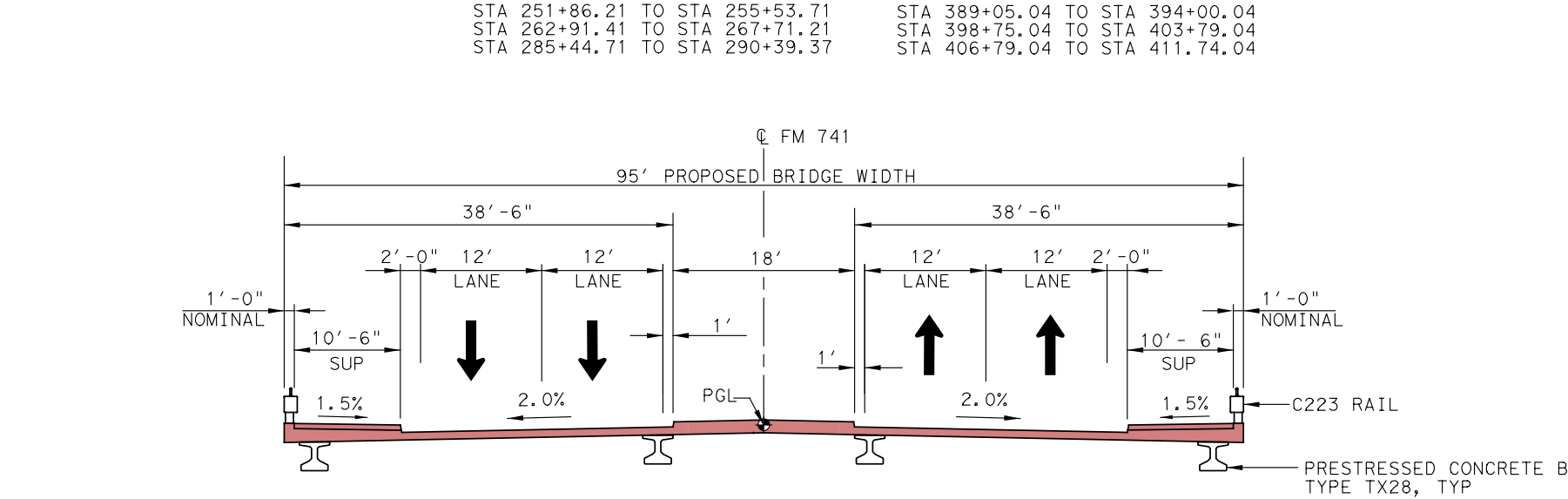
℄ FM 741
95' PROPOSED BRIDGE WIDTH
38'-6"
38'-6"
2'-0"
12' LANE
18'
1'-0" NOMINAL
10'-6" SUP
1.5%
2.0%
PGL
C223 RAIL
PRESTRESSED CONCRETE BEAM TYPE TX28, TYP

PROPOSED BRIDGE SECTION
STA 172+50.00 TO STA 175+00.00
STA 198+30.00 TO STA 200+80.00

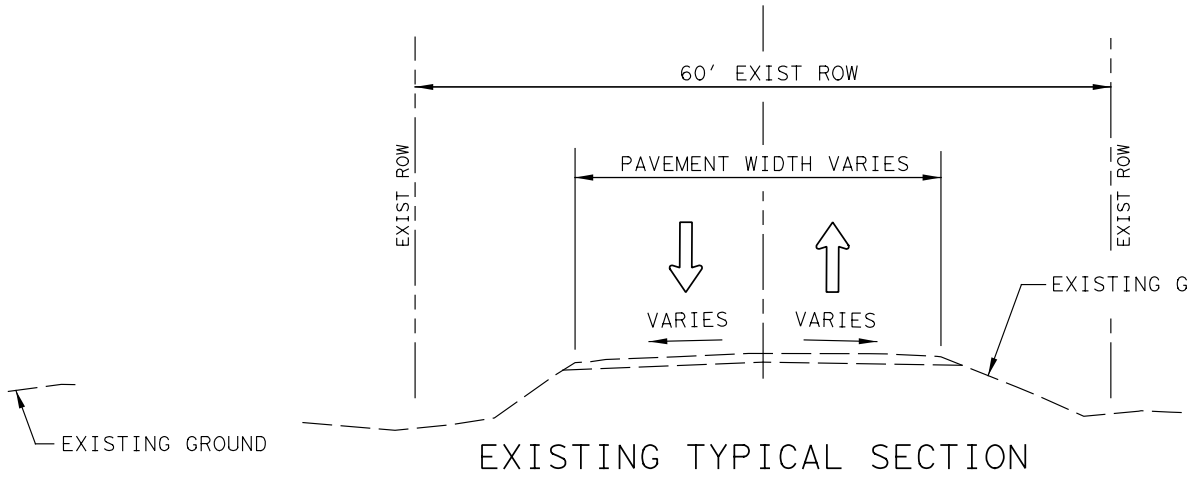
℄
60' EXIST ROW
PAVEMENT WIDTH VARIES
VARIES
VARIES
EXIST ROW
EXISTING GROUND

EXISTING TYPICAL SECTION
SIDE STREETS
VENNER CIR
BLACKLAND RD
COUNTY WOODS RD
HIGH COUNTRY LN
DOZIER CIR
PRECEINCT RD
LEWIS CIR
WINDY LN

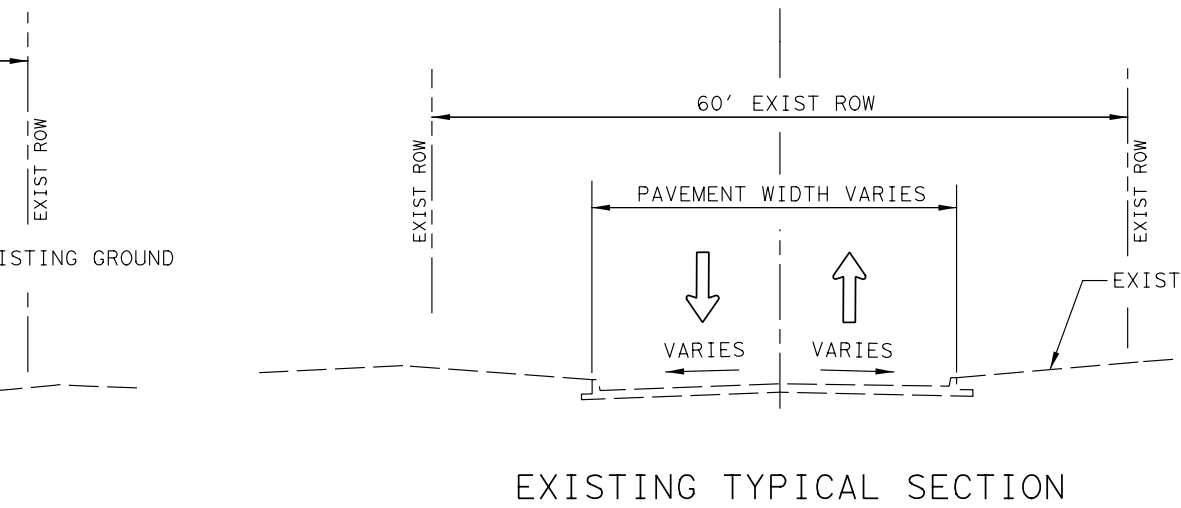
℄
60' EXIST ROW
PAVEMENT WIDTH VARIES
VARIES
VARIES
EXIST ROW
EXISTING GROUND

EXISTING TYPICAL SECTION
SIDE STREETS
MOONLIGHT TRAIL

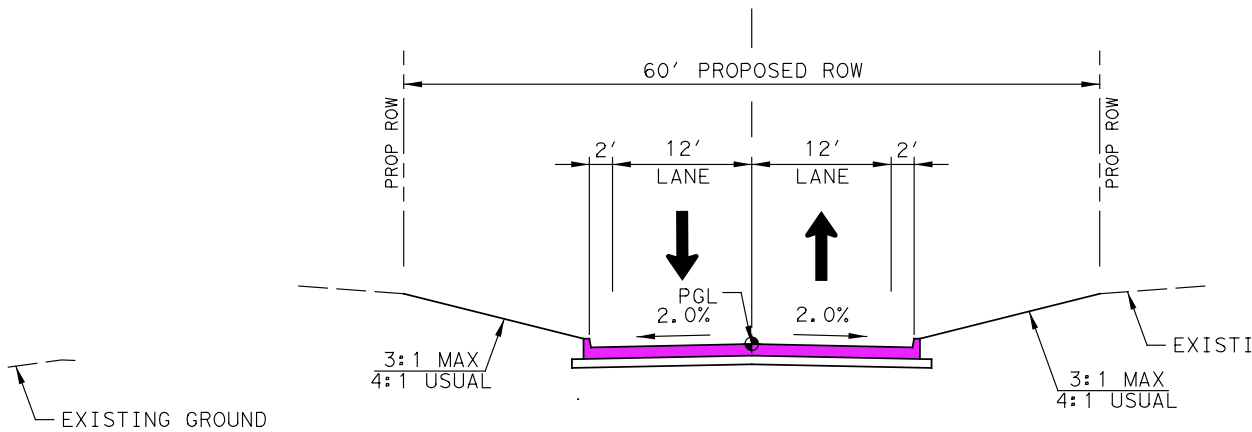
℄
60' PROPOSED ROW
2'
12' LANE
12' LANE
PGL
2.0%
3:1 MAX 4:1 USUAL
PROP ROW
EXISTING GROUND

PROPOSED TYPICAL SECTION
SIDE STREETS
BLACKLAND RD
COUNTY WOODS RD

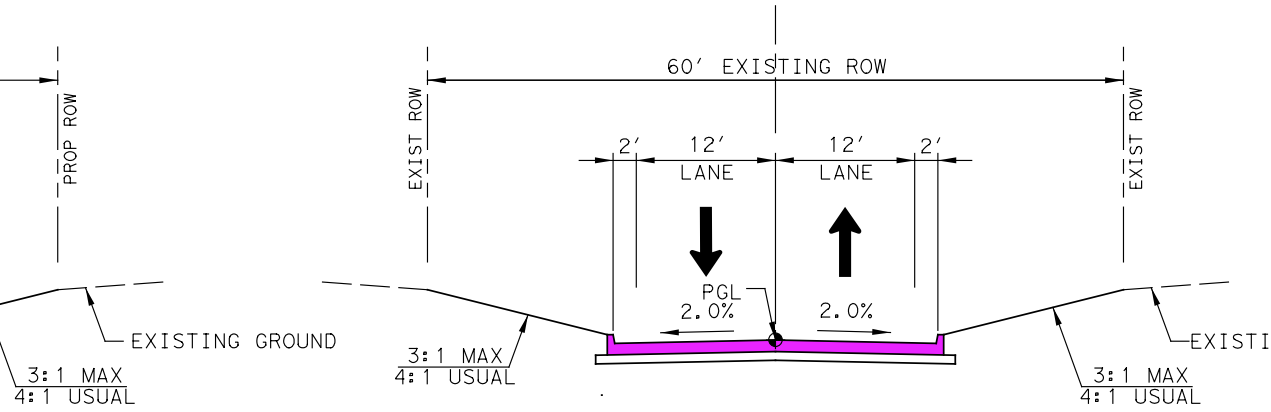
℄
60' EXISTING ROW
2'
12' LANE
12' LANE
PGL
2.0%
3:1 MAX 4:1 USUAL
EXIST ROW
EXISTING GROUND

PROPOSED TYPICAL SECTION
SIDE STREETS
VENNER CIR
HIGH COUNTRY LN
DOZIER CIR
PRECINCT RD
LEWIS CIR
WINDY LANE
MOONLIGHT TRAIL

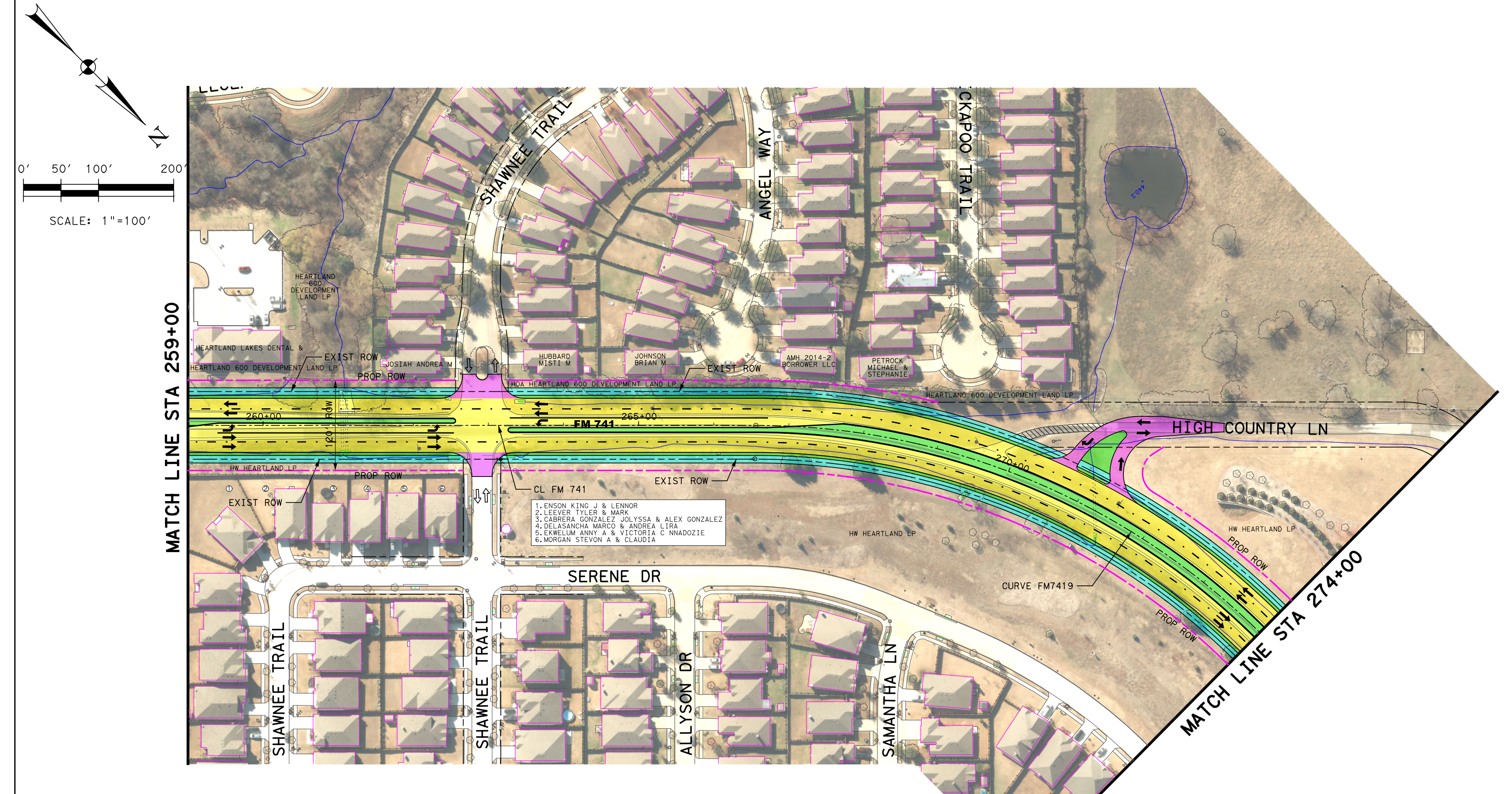
N
0' 50' 100' 200'
SCALE: 1"=100'
MATCH LINE STA 259+00
SHAWNEE TRAIL
ANGEL WAY
KICKAPOO TRAIL
HEARTLAND LAKES DENTAL & ...
EXIST ROW
PROP ROW
FM 741
260+00
265+00
270+00
HIGH COUNTRY LN
CL FM 741
SERENE DR
ALLYSON DR
SAMANTHA LN
CURVE FM7419
HW HEARTLAND LP
MATCH LINE STA 274+00
1.ENSON KING J & LENNOR
2.LEEVER TYLER & MARK
3.CABRERA GONZALEZ JOLYSSA & ALEX GONZALEZ
4.DELASANCHA MARCO & ANDREA LIRA
5.EKWELUM ANNY A & VICTORIA C NNADOZIE
6.MORGAN STEVON A & CLAUDIA

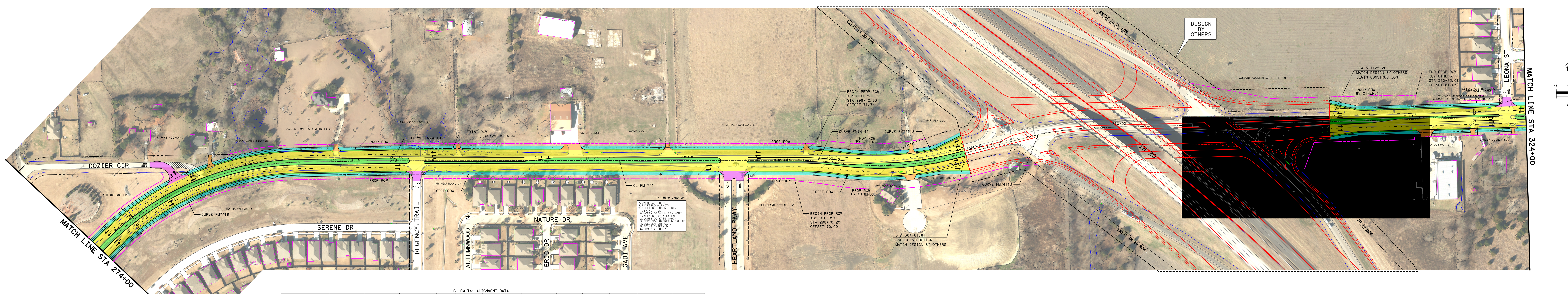
MATCH LINE STA 274+00
DOZIER CIR
VARGAS GIOVANNI
DOZIER JAMES STEPHEN
DOZIER JAMES S & JUANITA A
PSH ASSOCIATES LLC
C LEE INVESTMENTS LLC
FOSTER JESSIE
CANOR LLC
NADG 10/HEARTLAND LP
CURVE FM74110
CURVE FM7419
EXIST ROW
PROP ROW
280+00
285+00
290+00
295+00
300+00
305+00
310+00
320+00
FM 741
CL FM 741
HW HEARTLAND LP
SERENE DR
REGENCY TRAIL
AUTUMNWOOD LN
NATURE DR
ERIC DR
GABI AVE
HEARTLAND PKWY
HEARTLAND RETAIL LLC
7.OWEN CATHERINE
8.RAYFIELD MARKITA
9.COLLIER GINGER L REV LIVING TRUST
10.MORIN BRIAN & PEA MONY
11.KEEN RICKY & KAREN
12.JONES DONETTE MARIA
13.FERGUSON GARRET & SALLIE
14.CULLEN JOSHUA W
15.AKINS SHERRY D
16.GOMEZ ANTHONY
BEGIN PROP ROW (BY OTHERS) STA 298+70.20 OFFSET 70.00'
BEGIN PROP ROW (BY OTHERS) STA 299+42.63 OFFSET 71.74'
CURVE FM74111
CURVE FM74112
CURVE FM74113
PROP ROW (BY OTHERS)
ALAYNAP USA LLC
STA 304+61.81 END CONSTRUCTION MATCH DESIGN BY OTHERS
EXIST IH 20 ROW
IH 20
DESIGN BY OTHERS
DASSONS COMMERICAL LTD ET AL
STA 317+25.26 MATCH DESIGN BY OTHERS BEGIN CONSTRUCTION
PROP ROW (BY OTHERS)
END PROP ROW (BY OTHERS) STA 320+23.06 OFFSET 81.05'
VINTAGE MEADOWS RESIDENTIAL COMMUNITY INC
LEONA ST
SC CAPITAL LLC
MATCH LINE STA 324+00
N
0' 50' 100' 200'
SCALE: 1"=100'

[redacted]

CL FM 741 ALIGNMENT DATA

| CURVE NO. | P.I. STATION | P.I. STATION - N | P.I. STATION - E | DELTA | RADIUS | DEGREE | TANGENT | LENGTH | CHORD BEARING | CHORD LENGTH | P.C. STATION | P.T. STATION | BACK TANGENT | AHEAD TANGENT |
|---|---|---|---|---|---|---|---|---|---|---|---|---|---|---|
| FM7419 | 276+18.77 | 6,941,629.43 | 2,596,020.54 | 90° 31' 18.77" (RT) | 954.00' | 6° 00' 21.05" | 962.73' | 1,507.23' | N 0° 02' 13.71" E | 1,355.29' | 266+56.04 | 281+63.27 | N 45° 13' 25.67" W | N 45° 17' 53.10" E |
| FM74110 | 284+89.09 | 6,942,535.83 | 2,596,936.42 | 0° 51' 53.37" (RT) | 1,200.00' | 4° 46' 28.73" | 9.06' | 18.11' | N 45° 43' 49.78" E | 18.11' | 284+80.04 | 284+98.15 | N 45° 17' 53.10" E | N 46° 09' 46.47" E |
| FM74111 | 299+53.69 | 6,943,550.23 | 2,597,992.85 | 7° 37' 13.91" (RT) | 1,040.00' | 5° 30' 33.15" | 69.26' | 138.32' | N 49° 58' 23.43" E | 138.22 | 298+84.43 | 300+22.75* | N 46° 09' 46.47" E | N 53° 47' 00.38" E |
| FM74112 | 302+24.66 | 6,943,710.45 | 2,598,211.63 | 21° 58' 25.70" (LT) | 1,040.00' | 5° 30' 33.15" | 201.91' | 398.86' | N 42° 47' 47.53" E | 396.42' | 300+22.75* | 304+21.61 | N 53° 47' 00.38" E | N 31° 48' 34.68" E |
| FM74113 | 308+01.86 | 6,944,205.17 | 2,598,518.49 | 12° 53' 37.56" (RT) | 1,040.00' | 5° 30' 33.15" | 117.52' | 234.04' | N 38° 15' 23.46" E | 233.55' | 306+84.35 | 309+18.39 | N 31° 48' 34.68" E | N 44° 42' 12.23" E |

*P.R.C.

FINAL LOCATIONS OF MEDIAN OPENINGS WILL BE DETERMINED IN THE PS&E DEVELOPMENT PHASE IN COORDINATION WITH THE CITY OF FORNEY AND KAUFMAN COUNTY

490
480
470
460
450
440
430
420
MATCH LINE STA 259+00 EL=462.76
ex = 0.21' K = 134 L=150.00'
VPC STA. 261+15.00
VPI STA. 261+90.00 EL=460.86
VPT STA. 262+65.00
(-) 0.66% (+) 0.46%
EXIST 2X36" RCP TO BE REPLACED FL EL=448.85
PROPOSED PGL AT ℄ FM 741
EXISTING GROUND AT ℄ FM 741
EXIST 36" RCP TO BE REPLACED FL EL=455.61
FM 741 PROFILE
MATCH LINE STA 274+00 EL=466.45
MATCH LINE STA 274+00 EL=466.45
(+) 0.46% (-) 0.53%
VPI STA. 274+00.00 EL=466.92
ex = -0.19' K = 152 L=150.00'
VPC STA. 274+25.00
VPT STA. 275+75.00
EXIST 30" RCP TO BE REPLACED FL EL=457.36
ex = 0.40' K = 71 L=150.00'
VPC STA. 284+65.00
VPI STA. 285+40.00 EL=461.55
VPT STA. 286+15.00
(-) 0.53% (+) 1.59%
EXIST 2X36" RCP TO BE REPLACED FL EL=451.36
(+) 1.59% (-) 1.20%
VPI STA. 296+95.00 EL=479.41
ex = -1.74' K = 179 L=500.00'
VPC STA. 294+45.00
VPT STA. 299+45.00
FM 741 PROFILE
END CONSTRUCTION STA 304+61.81 MATCH DESIGN BY OTHERS
PROPOSED PGL (BY OTHERS)
BEGIN CONSTRUCTION STA 317+25.26 MATCH DESIGN BY OTHERS
MATCH LINE STA 324+00 EL=472.72
260+00
265+00
270+00
275+00
280+00
285+00
290+00
295+00
300+00
305+00
310+00
315+00
320+00
PROPOSED
EXISTING

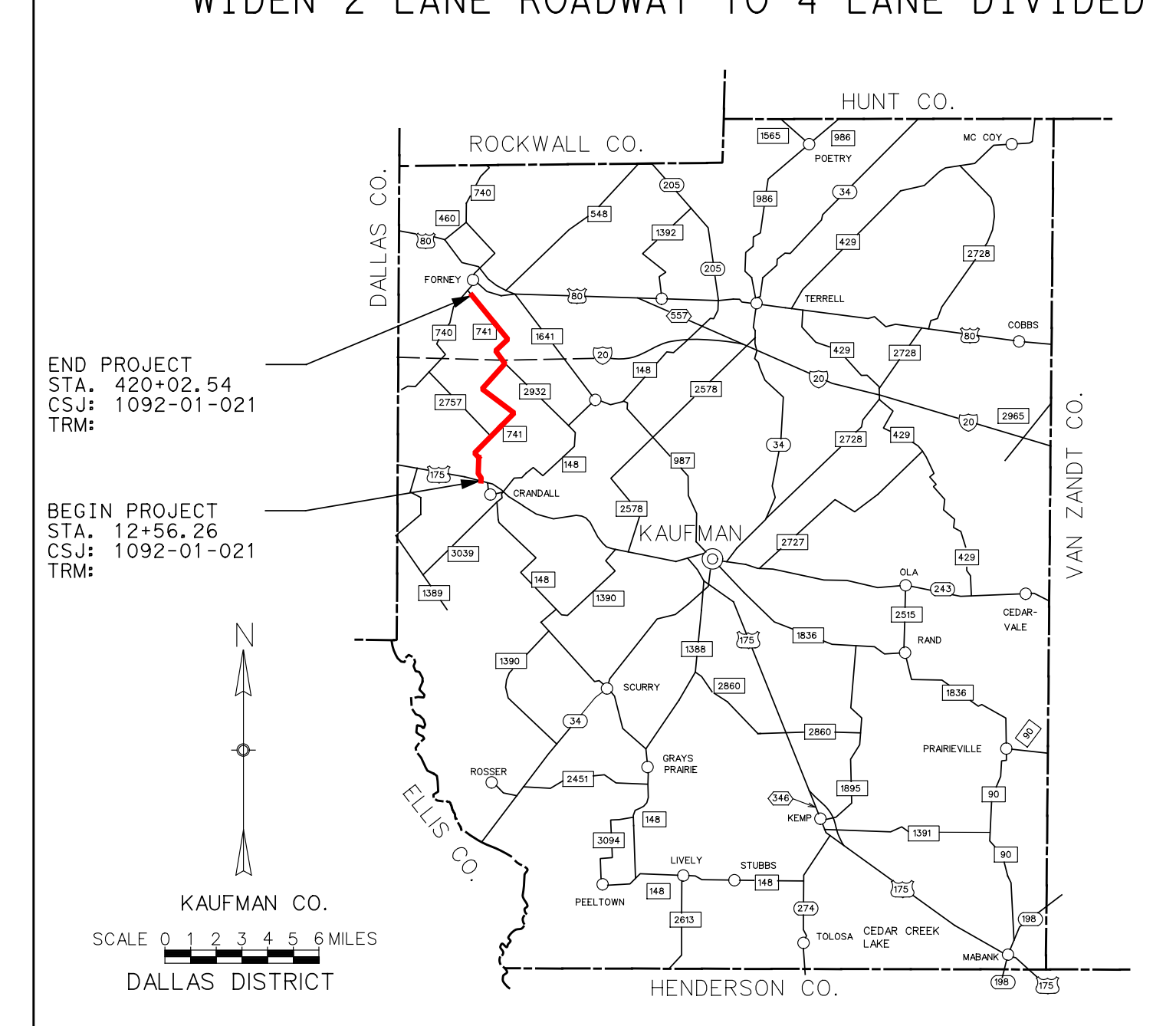
HUNT CO.
ROCKWALL CO.
DALLAS CO.
VAN ZANDT CO.
END PROJECT
STA. 420+02.54
CSJ: 1092-01-021
TRM:
BEGIN PROJECT
STA. 12+56.26
CSJ: 1092-01-021
TRM:
KAUFMAN CO.
SCALE 0 1 2 3 4 5 6 MILES
DALLAS DISTRICT
HENDERSON CO.
N

Texas Department of Transportation
© 2020 BY TEXAS DEPARTMENT OF TRANSPORTATION ALL RIGHTS RESERVED
DALLAS DISTRICT
CONCEPTUAL SCHEMATIC
MOHAMED K. BUR, P.E., DISTRICT ENGINEER
KAUFMAN COUNTY
FM 741
PROJECT LIMIT: FROM US 175
TO FM 548
CSJ: 1092-01-021
FM 741 FUNCTIONAL CLASS: URBAN ARTERIAL
DESIGN SPEED: 45 MPH FM 741
30 MPH CROSS STREETS
PROJECT LENGTH: 7.717 MILES
WIDEN 2 LANE ROADWAY TO 4 LANE DIVIDED
LOCATION MAP
30% SCHEMATIC
THESE DOCUMENTS ARE FOR INTERIM REVIEW AND ARE NOT INTENDED FOR REGULATORY APPROVAL, PERMIT, BIDDING OR CONSTRUCTION PURPOSES. THEY WERE PREPARED BY OR UNDER THE SUPERVISION OF:
ABENET BEKELE 86055 9/17/20
SEPTEMBER 2020
SCALE: 1"=100'
ROLL 5 OF 7
SHEET INDEX
ROLL 1: PLAN AND PROFILE - BEGIN PROJECT TO NORTH OF VENNER CIRCLE
ROLL 2: PLAN AND PROFILE - NORTH OF VENNER CIRCLE TO NORTH OF FM 2757
ROLL 3: PLAN AND PROFILE - NORTH OF FM 2757 TO NORTH OF COUNTY WOODS ROAD
ROLL 4: PLAN AND PROFILE - NORTH OF COUNTY WOODS ROAD TO NORTH OF SUNNYBROOK DRIVE
ROLL 5: PLAN AND PROFILE - NORTH OF SUNNYBROOK DRIVE TO NORTH OF LEONA STREET
ROLL 6: PLAN AND PROFILE - NORTH OF LEONA STREET TO NORTH OF GOLDEN MEADOW LANE
ROLL 7: PLAN AND PROFILE - NORTH OF GOLDEN MEADOW LANE TO SOUTH OF FM 548
0' 50' 100' 200' HORIZONTAL
0' 5' 10' 20' VERTICAL
GRAPHIC SCALES IN FEET
Lockwood, Andrews & Newnam, Inc.
A LEO A DALY COMPANY
TBPE FIRM REGISTRATION NO. 2614